AGENDA & Notice of Planning Commission Work Session Meeting

The Planning Commission of the City of Newport will hold a work session meeting at **6:00 p.m., Monday, November 28, 2011,** at the Newport City Hall, Conference Room "A", 169 SW Coast Hwy., Newport, OR 97365. A copy of the meeting agenda follows.

The meeting location is accessible to persons with disabilities. A request for an interpreter for the hearing impaired, or for other accommodations for persons with disabilities, should be made at least 48 hours in advance of the meeting to Peggy Hawker, City Recorder, 541-574-0613.

The City of Newport Planning Commission reserves the right to add or delete items as needed, change the order of the agenda, and discuss any other business deemed necessary at the time of the work session.

NEWPORT PLANNING COMMISSION
Monday, November 28, 2011, 6:00 P.M.

AGENDA

A. Unfinished Business.

1. Discuss the Elimination of "Timeshare" definitions with Vacation Rental Code Update.
2. Continued Review of the Draft Ordinance for Tree City USA Designation.
3. Omnibus Review of codification of Zoning Ordinance into the Municipal Code.

B. Adjournment.

City of Newport

Community Development Department

Memo

To: Planning Commission/Commission Citizen Advisory Committee

From: Derrick Tokos, Community Development Director

Date: November 23, 2011

Re: Zoning Ordinance Regulation of Timeshares

In reviewing the Definitions Section of the Newport Zoning Ordinance, as part of our effort to codify the ordinance into the Municipal Code, it became apparent that definitions related to the regulation of timeshares (below) should be addressed as part of the vacation rental code update. One approach is to delete the definitions below and forgo trying to draw a distinction between a timeshare and a typical residential occupancy. If you believe that frequent turnover timeshare arrangements should be specifically addressed and regulated as a vacation rental would be, then a simplified definition can be prepared that targets timeshare tenancy that is less than 30 consecutive days. It could then be tied to the new vacation rental definition.

Irrespective of the direction you go, a definition for "residential unit" should be retained, but simply cross referenced to "dwelling unit" as the terms are used interchangeably throughout the code. The other definitions are not used outside of the Definitions section of the Zoning Ordinance.

<u>Pre-existing Time-Share Project</u>. A time-share project the outstanding interests in which have already been created, or with respect to which a notice of intent (such as currently required by ORS 92.345 and/or ORS 91.602) as required by law or any administrative regulations disclosing the nature and number of the interest to be created therein has been filed with the Real Estate Division of the State of Oregon on or prior to the effective date of the adoption of this Ordinance. Such a "pre-existing time-share project" shall constitute a pre-existing, non-conforming use, to the extent that the same might otherwise constitute a prohibited use. However, such status as a "pre-existing time-share project" shall not authorize the creation of additional interests or the subdivision of any existing interests or the expansion of such project beyond that which existed or was so disclosed at or prior to the effective date of the adoption of this ordinance, except and unless the same shall conform and comply with all applicable requirements of this ordinance and any other applicable ordinances, regulations, or statutes.

Time-Share Project. Any real property and/or improvements upon real property which are subject to any plan or arrangement such that the right to the use and possession of one or more dwelling units thereof shall have been divided into 11 or more interests whereby the holder of such an interest shall have a right to the possession of all or part of one part of the premises subject to such interest, to the exclusion of persons holding other interests therein during any period, whether annually recurring or not. "Time-share projects" shall include any premises any part of which shall be subject to agreements, whether written or oral, whereby 11 or more common owners shall divide the right to the use or possession of said premises such that each such owner shall have a period during which such owner shall have the right to the use of such premises to the exclusion of others, whether or not such right shall be expressly designated as a separate ownership interest, and shall also include all such real property and improvements or interests therein as any part of which may be owned or possessed by a single entity, such as a corporation or partnership, if such entity shall hold title in trust or otherwise subject to an agreement or arrangement whereby 11 or more possessory interests are created. "Time-share project" shall not include a tenancy in common, as such a tenancy exists at common law, if unmodified by any restrictive covenants or other agreement whereby such common tenants have or may claim or exercise the right to exclusive use, occupancy, or possession of the premises to the exclusion of other tenants as, for instance, where such tenants in common may hold property for business or investment purposes.

Derrick Tokos

From: Lee Hardy [lee@yaquinabayproperties.com]
Sent: Wednesday, November 23, 2011 9:10 AM
To: Derrick Tokos
Subject: RE: Timeshares versus Vacation Rentals

Hi Derrick,
It might be useful to see what the "typical use" of timeshare units are in this city. Many are part of a rental pool and are rented like VRD's much of the time. Some are not. Tracy may have more insight into this, if he can break free from the flooded elevator he has been dealing with at the Embarcadero. If the use is strictly (and how do you verify that???) and solely by the owner of the time share and the time period owned by that owner is not rented, then you would have to treat it like a second home. Given the inability of a certain attorney who shall remain nameless to acknowledge that "residential" applies to anything one can live in, it might be useful to drop the "residential" descriptor and use something like "habitable structure". It may be that "habitable" refers to building and fire codes as well as whether or not you can put a bed and cook in a structure.

Have a great Turkey Day!
Lee

From: Derrick Tokos [mailto:D.Tokos@NewportOregon.gov]
Sent: Wednesday, November 23, 2011 8:47 AM
To: 'Lee Hardy'; 'Joya Menashe'; 'cindy reid'; 'Cindy Lippincott and Bob Berman'; 'Robert Oberbillig'; 'Melanie Sarazin'; 'Tracy Wiley'
Cc: Wanda Haney; David Marshall; 'Christy Monson'
Subject: Timeshares versus Vacation Rentals

Hi everyone,

Sorry to hit you up one last time, but in working to codify the City's Zoning Ordinance into the Newport Municipal Code (separate project) it became evident that definitions in the code that pertain to the regulation of timeshares should be addressed as part of the vacation rental code update. Attached is a memo that I prepared for the Planning Commission outlining the issue. It will be discussed at their November 28, 2011 work session (6:00 pm start).

If this is something you would like to weigh-in on, please feel free to drop me a note with your comments and I'll make sure they are passed along to the Planning Commission members.

Thanks,

Derrick I. Tokos, AICP
Community Development Director
City of Newport
ph: 541-574-0626
fax: 541-574-0644
d.tokos@NewportOregon.gov

Draft Code Revisions for Tree City USA Designation (latest revisions in ~~strikethrough~~ and double underline)	**Rationale for Change**
NMC CHAPTER 2.05 BOARDS AND COMMISSIONS *** **2.05.040 Parks and Recreation Committee** A. The Parks and Recreation Committee shall consist of five members and shall serve two-year terms. The parks director shall serve ex officio and shall act as secretary for the committee. B. The Parks and Recreation Committee shall have the following rights, responsibilities, and authority: 1. To make recommendations to the Council concerning city parks and recreation facilities, including the authority to make studies as necessary to assist their recommendations. Recommendations may include recommendations relating to acquisition, development, use, operation, and disposition of parks and recreation facilities. 2. To make recommendations concerning playground recreational facilities. 3. To make recommendations concerning financial and budgetary matters relating to parks and recreation. 4. To recommend rules and regulations relating to parks and recreation. 5. To serve as the City's "Tree Board," with the responsibility to study, investigate, develop and periodically update a written plan for the care, preservation, pruning, planting, replanting, removal and disposition of trees in parks, along public streets, and in other public	These changes create a "Tree Board," which is one of the requirements for obtaining a Tree City USA designation. The City's Parks and Recreation Committee is proposed to serve in this capacity. The Committee will be charged with preparing a plan for planting, maintaining, and removing trees along streets, and in parks and other public spaces. The plan must include a list of acceptable "street trees," and may also include a heritage tree program. City Council approval is required and the plan must be reviewed once every three years. The Committee is also charged with annually following up with the Arbor Day Foundation to maintain the City's Tree City USA designation. This proposal is tailored after ordinances that were adopted by Seaside and Coos Bay (attached), and represents minimum steps that a jurisdiction can take to obtain a Tree City USA designation.

places. a. As part of this plan, a list of acceptable species shall be developed and maintained for planting trees along public streets. The list shall provide spacing and planting details for each species, and divide trees into three classes based upon mature height: small (under 30 feet); medium (30 to 50 feet) and large (over 50 feet); b. The plan may include criteria for determining, and standards for protecting heritage trees within the city. The purpose of the heritage tree designation is to recognize, foster appreciation of, and protect trees having significance to the community. Criteria may include such things as species rarity, age, size, quality, association with historical events or persons, or scenic enhancement; c. A draft of the plan, and any amendments thereof, shall be presented to the City Council and, upon Council acceptance and approval, will constitute the official tree plan for the city; and d. The plan shall be reviewed completely at least once in every three-year period after initial approval. 6. To obtain the annual Tree City USA designation by the National Arbor Day Foundation.	
NMC CHAPTER 9.10 RIGHT-OF-WAY PERMITS *** **9.10.020 Applicability** The requirements of this chapter shall apply to all rights-of-way controlled or administered by the City of Newport, whether as a result of a dedication by plat or deed or agreement with Lincoln County or the State of Oregon. This chapter shall further apply to the planting, pruning, maintenance and removal of trees within parks and other city owned properties.	The City of Newport's right-of-way permitting process has been interpreted to apply to the removal of trees within the right-of-way, although the existing code is somewhat unclear. Some sort of permitting process is needed to ensure that planting, maintenance, and removal of trees within public rights-of-way, parks or other public places occurs in a manner that is consistent with the adopted tree plan. The proposed changes modify the right-of-way permitting process to serve this purpose.

9.10.030 Permit Required A. No person may cut, break, dig up, damage in any manner, undermine or tunnel for any purpose in any developed portion of a right-of-way, or obstruct any developed portion of right-of-way, without obtaining a right-of-way permit under this chapter. Developed portions of rights of way include all streets, sidewalks and any other paved or improved area. No person may cut, break, dig up, damage in any manner, undermine or tunnel within any portion of a right of way to place, modify, repair or maintain any utility facility without obtaining a right-of-way permit. No person may construct any street, sidewalk, trail or path within any right-of-way without a right-of-way permit. Application for permits shall be in the form prescribed by the city. Permits shall be issued for a limited time and shall specify the extent of the authority granted by the permit. No permit shall be issued unless the applicant has complied with or is not subject to Chapter 9.05. ~~A.~~B. No person shall plant, prune, or remove a tree within public right-of-way or on city owned property without obtaining a right-of-way permit. ~~B.~~C. Any person who cuts, breaks, digs up, damages in any manner, undermines or tunnels under any unimproved portion of a right of way for ~~non-utility~~ purposes other than as specified in subsections (A) and (B) must obtain an encroachment permit pursuant to Chapter 9.15.	To accomplish this, the scope of right-of-way permits has been expanded to apply to parks and other city owned properties. The relationship between a right-of-way permit and encroachment permit has also been clarified. An implementing ordinance can be crafted such that changes to the right-of-way permitting chapter of the Municipal Code will not go into effect until a tree plan is adopted.
9.10.040 Permit Applications A. Applications for right-of-way permits shall be submitted on forms provided by the city and shall be accompanied by drawings, plans, and specifications in sufficient detail to demonstrate: 1. That all work will be performed and any facilities will be constructed in accordance with all applicable codes, rules, and regulations.	A requirement has been added that persons planting trees along public streets must do so in a manner consistent with the specific standards. Application submittal requirements are also included for proposals to plant, prune or remove trees.

2. That all work will be performed and any facilities will be constructed by or for a franchisee in accordance with the franchise agreement 3. The location, route, and description of all of applicant's new facilities to be installed as well as all of applicant's existing facilities in the construction area, including a cross-section to show the facilities in relation to the existing street, curb, sidewalk, and right-of-way. 4. The construction methods to be employed for protection of existing structures, fixtures and facilities and a description of any improvements that the applicant proposes to temporarily or permanently remove or relocate. ~~4.~~5. Installation of trees along public streets is in accordance with the subsection 9.10.140. B. Applications for right-of-way permits, other than for the planting, pruning or removal of trees, shall be accompanied by the following: 1. A verification that the drawings, plans, and specifications submitted with the application comply with all applicable technical codes, rules and regulations. The city may require that the verification be by a registered professional engineer. 2. A written construction schedule, which shall include a deadline for completion of construction. The construction schedule is subject to approval by the city engineer. 3. The permit fee in an amount to be determined by resolution of the City Council, unless otherwise provided in a franchise agreement or applicable state law. The fee shall be designed to defray the costs of city administration of the construction permit program. Permit fees shall not be charged to any franchisee operating under a currently valid franchise or to any other person using city rights of way under an agreement with the city that requires payment of a franchise fee.	

C. Applications for right-of-way permits for planting, pruning, or removing trees shall be accompanied by the following: 1. A statement describing the work to be performed; and 2. A scaled drawing identifying the size, location, and species of the tree or trees to be planted, pruned or removed. For plantings the drawing shall also include distances between trees and nearby utilities, curbs and sidewalks. ***	
[Add new section 9.10.140. All subsequent subsections to be renumbered.] **9.10.140 Planting, Maintenance and Removal of Trees** A. The planting of trees along public streets shall adhere to the following standards: 1. Only those tree species identified in the city's adopted tree plan may be planted along public streets; 2. Spacing between trees shall be in accordance with recommendations contained in the adopted tree plan; 3. Only those trees listed as small in the adopted tree plan may be planted under or within 10 lateral feet of any overhead utility wire, or over or within five lateral feet of any underground water line, sewer line, transmission line or other utility; 4. Trees shall be setback from curbs and sidewalks by the size classification in the adopted tree plan, as follows: small trees, two feet; medium trees; three feet; and large trees, four feet;	This new subsection contains specific standards for planting trees along public streets. They are intended to ensure that such plantings do not compromise public infrastructure or increase maintenance costs to the City. Cross references to the adopted tree plan have been added where appropriate. Language is included exempting the City from having to obtain permits. As an alternative, City staff and others performing work on behalf of the City will be required to file paperwork establishing that they have reviewed and will follow the adopted tree plan. An outlet is provided for the City Manager to require the removal of hazard trees irrespective of the adopted tree plan. This could be particularly relevant if a heritage tree program is adopted.

5. No street trees shall be planted closer than 35 feet of a street corner, measured from the point of nearest intersecting curbs or curb lines; and 6. Trees shall be setback at least 10 feet from fire hydrants. B. The city shall have the right to plant, prune, maintain, and remove trees within public rights-of-way and city owned property, as may be necessary to ensure public safety or to preserve or enhance the symmetry and beauty of such public spaces. C. Persons performing activities described in subsection (B) shall not be required to obtain a permit provided a written statement is filed with the Public Works Department confirming that they have reviewed and will follow applicable provisions of the city's adopted tree plan. Such statements shall be current within 12 months of the date work is to be performed. D. City Manager may order the removal of any tree, or part thereof, irrespective of the adopted tree plan, upon a determination that such action is necessary to resolve an unsafe condition or prevent damage to public improvements.	
NMC CHAPTER 9.15 ENCROACHMENT PERMITS **9.15.010 Permit Requirement** A. The following actions are prohibited within rights-of-way or on city property except as authorized by the city by a temporary encroachment permit: 1. Placing or maintaining a structure. 2. Excavation or fill, including placing of rocks or other landscaping materials.	The proposed change removes a reference that an encroachment permit is required for planting trees in the public right-of-way. Issuance of an encroachment permit involves the preparation of a legal agreement between a property owner and City. They are targeted at structures, such as fences and retaining walls, that often change the use of a portion of a right-of-way. An encroachment permit is an ill suited and cumbersome tool to apply to tree plantings and to staffs knowledge a permit has never been issued for that purpose.

~~3. Planting a tree.~~ ~~4.~~3. Landscaping activities, other than in the portion of the right-of-way immediately adjacent to property owned, controlled or possessed by the person. B. Encroachment into improved right of way is only allowed if specifically authorized by the city pursuant to Chapter 9.10. C. The person in control of any encroachment of a structure in or over any right of way existing prior to the effective date of this chapter shall apply for an encroachment permit within 10 days of being requested to do so by the city. No action charging a violation of this section may be initiated for an encroachment existing prior to the effective date of this ordinance or while a timely filed application for an encroachment permit is under consideration by the city. D. This chapter does not apply to signs, which may be placed in rights of way only as authorized by a permit issued under Chapter 10.10. ***	
9.15.020 Exemptions A. Certain encroachments are exempt from the encroachment permit requirement. Exempt encroachments are those which would have a minor impact on the present or planned use of the unimproved public right of way, easement or public property and those which are expressly permitted by ordinance. Exempt encroachments are: 1. Mailboxes and their enclosing structures. 2. Guard/handrails along edges of driveway approaches, walks, stairs, etc. encroaching in unimproved public right of way.	This exemption is not needed. It implies that an encroachment permit would be required for plantings (including trees) that obstruct line of sight within public rights-of-way. That is not the case. Line of sight obstructions are addressed with separate regulations.

~~3. Lawns and plants encroaching in unimproved public right-of-way that do not obstruct visibility for pedestrians, bicyclists and motorists, and that are placed or maintained by the owner or person in possession of the adjacent property.~~ ~~4.~~3. Bicycle lockers and racks authorized in an approved parking district parking plan. ~~5.~~4. Work authorized by a right-of-way permit.	
NMC CHAPTER 13.05 SUBDIVISION AND PARTITION *** **13.05.015 Streets** *** **M. Street Trees.** Trees may be installed within proposed or existing rights-of-ways provided the plantings conform to the city's adopted tree plan.	A cross reference has been added to the Subdivision Ordinance pointing out that street trees are subject to the city's adopted tree plan.
NZO SECTION 2-4-5. LANDSCAPING REQUIREMENT* *** [Add new section 2-4-5.050. All subsequent subsections to be renumbered.] **2-4-5.050. Tree Plantings.** Trees may be installed within rights-of-ways provided the plantings conform to the city's adopted tree plan.	A cross reference has been added to note that plantings within the right-of-way must adhere to the city's adopted tree plan.
VISION CLEARANCE REQUIREMENTS	
NMC 8.10 Nuisances ***	The nuisance code is amended so that it is consistent with, and cross references to, the City's clear vision area requirements.

8.10.060 Vegetation and Vision Obstructions The following things, practices, or conditions on any property are nuisances. For purpose of this section, "property" includes any portion of a right-of-way adjacent to the property. A. Grass, thistles, cockleburs, weeds, or other noxious vegetation greater than eight inches in height or that are a fire hazard. The city shall have discretion to not enforce this section based on the totality of circumstances, including the type and location of the property, whether the property is appropriately left in a natural state, whether the property has even been cleared without appropriate measure to prevent invasive plant species, and other similar factors. B. Dead, decaying, or unsafe trees or tree limbs that present a safety hazard to the public or adjacent property. C. Brush, bushes, shrubbery, tree limbs, or other growth that projects over a sidewalk at less than 8 feet above the sidewalk level, or that projects over a street at less than 13 feet above the street level. D. Any vegetation, wall, fence, or other vision-obstructing structure exceeding ~~36 inches~~three and one half feet in height measured from the roadway level that obstructs a driver's view at an intersection or driveway access. Vegetation, wall, fence, or structure obstructs vision if it is within ~~20 feet of a lot corner at the intersection or at the edge of a driveway and~~a clear vision area pursuant to Section 2-4-3 of the Newport Zoning Ordinance and, in the determination of the city manager, constitutes a safety hazard.	
~~**CHAPTER 9.25 INTERSECTION SAFETY**~~ ~~**9.25.10 Purpose**~~ ~~The purpose of this chapter is to promote safety at intersections and drive access points by reducing obstructions to clear vision at intersections.~~	This chapter of the Municipal Code included clear vision area requirements that duplicate and conflict with standards contained in the Zoning Ordinance. It also conflicted with language above, in the nuisance code. Because the Zoning Ordinance includes administrative remedies, such as a variance or code interpretation, it is a more desirable location to consolidate clear vision area standards. That is why this Chapter of the Municipal Code is proposed to be deleted.

~~**9.25.20 Definitions**~~ ~~As used in this chapter:~~ ~~A. Fence means a barrier intended to prevent escape or intrusion or to mark a boundary. A fence may consist of wood, metal, masonry, or similar materials, or a hedge or other planting arranged to form a visual or physical barrier.~~ ~~B. Street means the entire width between right-of-way lines of every way for vehicular and pedestrian traffic and includes the terms "road," "highway," "lane," "place," "avenue," "alley," and other similar designations.~~ ~~C. Clear vision area means that area, as computed by Section 9.25.040, which allows the public using the city streets an unobstructed view of an intersection approach.~~ ~~D. Person means and includes a natural person, joint venture, joint stock company, partnership, association, club, company, corporation, business, trust, organization, or the manager, lessee, agent, officer, or employee of any of them.~~ ~~E. Driveway or accessway means the point at which a motor vehicle gains ingress or egress to a property from a street.~~ ~~**9.25.30 Requirements**~~ ~~A. No person shall maintain, or allow to exist on property which they own or which is in their possession or control, trees, shrubs, hedges, or other vegetation or projecting overhanging limbs that obstruct the view necessary for safe operation of motor vehicles or otherwise cause danger to the public in the use of city streets. It shall be the duty of the person who owns, possesses, or controls the property to remove or trim, and keep trimmed, any obstructions to the view necessary for safe operation of motor vehicles.~~	

~~B. A clear vision area shall be maintained on the corners of all property adjacent to an intersection as provided by Section 9.25.040.~~ ~~C. A clear vision area shall contain no planting, fence, wall, structure, or temporary or permanent obstruction, except for an occasional utility pole or tree, exceeding thirty inches in height, measured from the top of the curb, or where no curb exists, from the street centerline grade. Trees exceeding this height may be located in this area; provided, all branches and foliage are removed to the height of eight feet above the grade. Open wire fencing that does not obscure sight more than ten percent is allowed to a maximum height of six feet.~~ ~~D. Structures erected in compliance with zoning ordinance setbacks are exempt from this chapter.~~ ~~**9.25.40 Computation**~~ ~~A. The clear vision area for street intersections and driveway or accessway intersections shall be that area within a twenty-foot radius of the lot corner nearest the intersection, or within a twenty-foot radius of the intersection of the lot line and the edge of a driveway. Any building that meets the applicable setback requirement in effect at the time of construction is exempt from the clear vision requirement.~~ ~~B. Modification of this computation may be made by the city engineer after considering traffic engineering and safety principles, taking into consideration the location of the actual edge of the roadway, type of intersection, site characteristics, traffic controls, vehicle speed, traffic volumes, and other similar factors. Aesthetics and length of time fences or vegetation have existed are not relevant factors.~~ ~~**9.25.50 Enforcement**~~ ~~Violation of this chapter is a civil infraction and a nuisance. Enforcement~~	

~~procedures shall be suspended while an application for a modification is being considered.~~ ~~**9.25.60 Liability**~~ ~~The person owning, in possession of, occupying or having control of any property within the city shall be liable to any person who is injured or otherwise suffers damage by reason of the failure to remove or trim obstructions and vegetation as required by Section 9.25.030. Furthermore, the person shall be liable to the city for any judgment or expense incurred or paid by the city, by reason of the person's failure to satisfy the obligations imposed by this chapter.~~	
NZO SECTION 2-4-3. ~~VISION CLEARANCE~~CLEAR VISION AREAS ~~REQUIREMENT~~ ~~2-4-3.005. Front Yard Vision Clearance. No fence or hedges of any kind shall exceed three and one-half feet in height in a required front yard or exceed three and one-half feet in height in a second front yard. On corner lots where the rear lines of the rear yards are contiguous, fences not over six feet in height, measured above the sidewalk grade, may be permitted on side streets not closer than 40 feet from the principal street. All trees growing or standing in the street right-of-way in the front or second front yard that overhang the sidewalk shall be trimmed to a height not less than eight feet above the sidewalk, and all trees that overhang the curb and street pavement shall be trimmed to a height of not less than 12 feet over such curb and street pavement. All trees and shrubbery shall be trimmed so as not to interfere with sight distance at intersections.~~ ~~2-4-3.010. Vision Clearance for Corner Lots.~~ ~~A. Establishment:~~ ~~A vision clearance area is hereby established for all zones and shall be maintained.~~ ~~B. Definition:~~	This Section of the Zoning Ordinance has been amended to incorporate elements of Chapter 9.25 of the Municipal Code. The method of measuring clear vision areas at street intersections has been changed to reference the curb line or edge of pavement as opposed to the property boundary. This is easier for people to understand and for staff to verify in the field. It also avoids the need for costly surveys. Proposed language borrows elements from codes adopted by the cities of Newberg and Eugene (attached).

~~A vision clearance area for corner lots shall consist of a triangular area on a lot at the intersection of two streets or a street and a railroad, two sides of which are lot lines to a distance specified in these regulations. The third side of the triangle is a line across the corner of the lot joining the non-intersecting ends of the other two sides. Where the lot lines at intersections have rounded corners, the lot lines will be extended in a straight line to the point of intersection. The vision clearance area contains no plantings, walls, structures, or temporary or permanent obstructions exceeding three and one-half (3 1/2) feet in height measured from the top of the curb.~~

~~C. Measurement of Vision Clearance for Corner Lots:~~

~~The following measurement shall establish clear vision areas.~~

	Measurement	
~~Right of way Width~~	~~Street Width~~	~~Each Lot Line~~
~~60 feet~~	~~36 feet~~	~~30 feet Residential Only~~
~~50 feet~~	~~26 feet~~	~~40 feet Residential Only~~
~~50 feet~~	~~28 feet~~	~~20 feet Residential Only~~
~~Less than 50 feet~~	~~28 feet or Less~~	~~20 feet Residential and Commercial~~

~~2-4-3.015. Obstruction of Front Yards by Certain Vehicles Prohibited. No boat, trailer, travel trailer, mobile trailer, truck, automobile, or other vehicle may be stored or parked in the required front yards for longer than seven consecutive days.~~

2-4-3.005. Purpose. The purpose of this section is to promote safety at intersections and drive access points by reducing obstructions to clear vision at intersections.

2-4-3.010. Clear Vision Area Defined. A vision clearance area includes the following:

A. At the intersection of two streets, a triangle formed by the intersection of the curb lines, with each leg of the vision clearance triangle being a minimum of 35 feet in length. Where curbs are absent the edge of the asphalt or future curb location shall be used as a guide. The City

Engineer may modify this requirement, in writing, upon finding that more or less distance is required (i.e. due to traffic speeds, roadway alignment, etc.). B. A portion of a lot subject to a front yard setback as defined in Section 2-3-2. A clear vision area does not include that portion of a second front yard outside of the area described in subsection (A). 2-4-3.015. Clear Vision Area Requirements. A clear vision area shall contain no planting, fence, wall, structure, or temporary or permanent obstruction, except for an occasional utility pole or tree, exceeding three and one half feet in height, measured from the top of the curb, or where no curb exists, from the street centerline grade. Trees located within a clear vision area shall have their branches and foliage removed to the height of eight feet above the grade. 2-4-3.020. Maintenance of Clear Vision Areas. It shall be the duty of the person who owns, possesses, or controls real property or right-of-way adjacent thereto, to maintain a clear vision area in the manner provided in this section. 2-4-3.025. Exemptions for Buildings. A building erected in compliance with zoning ordinance setbacks is exempt from this section. 2-4-3.030. Liability. The person owning, in possession of, occupying or having control of any property within the city shall be liable to any person who is injured or otherwise suffers damage by reason of the failure to remove or trim obstructions and vegetation as required by this Section. Furthermore, the person shall be liable to the city for any judgment or expense incurred or paid by the city, by reason of the person's failure to satisfy the obligations imposed by this Section. 2-4-3.035. Variances. The requirements of this section shall be subject to the processes and criteria contained in Section 2-5-2, Adjustments and Variances.	

Chapter 8.30
TREES AND TREE BOARD

Sections:

8.30.010 Short title.
8.30.020 Purpose.
8.30.030 Definitions.
8.30.040 Tree board – Composition and procedures.
8.30.050 Tree board – Duties.
8.30.060 Permits.
8.30.070 Planting, maintenance and removal.
8.30.080 Protection of trees.
8.30.090 Appeals.

8.30.010 Short title.
This chapter may be cited as the Coos Bay tree ordinance. [Ord. 181 § 1, 1992].

8.30.020 Purpose.
It is the purpose of this chapter to promote and protect the public health, safety, and welfare of the residents of the city of Coos Bay by providing for the regulation of the planting, maintenance, and removal of trees and shrubs within the city. [Ord. 181 § 2, 1992].

8.30.030 Definitions.
For the purposes of this chapter, the following definitions apply:

"Park trees" means trees, shrubs, bushes and all other woody vegetation in public parks and all other areas owned by the city and open to the public.

"Public right-of-way" means streets and alleys including that portion of the dedicated right-of-way which is not currently used as a street or alley.

"Street trees" means trees, shrubs, bushes, and all other woody vegetation on land located within or adjacent to public rights-of-way within the city. [Ord. 181 § 3, 1992].

8.30.040 Tree board – Composition and procedures.
(1) The tree board shall be appointed by the city council and shall consist of seven members.

(a) One member of the tree board shall also be a member of the city council.

(b) One member of the tree board shall also be a parks commissioner.

(c) If the aesthetics commission has been formed, one member of that commission shall also be a member of the tree board.

(d) At least one member of the tree board shall be a representative from the field of arboriculture, landscape architecture, or otherwise have a background and professional knowledge of trees and their care.

(e) One member of the tree board shall be designated by the board of the Coos Bay Downtown Association.

(f) The balance of the tree board shall be citizens with an interest in trees.

(g) One member of the tree board may live outside the city limits of Coos Bay.

(2) The members shall be appointed for a term of four years. Vacancies, except at the expiration of a term, shall be filled by a temporary appointment made by the council for the remainder of the unexpired term. Committee members may be reappointed for additional terms of four years each.

(3) A member of the tree board may resign at any time by submitting a letter of resignation to the council. A member may be removed by the council for nonperformance of duty. A member who is absent from three consecutive meetings without excuse is considered to be in nonperformance of duty. The possible need for removal may be brought to the attention of the council by the tree board.

(4) The tree board members, by majority vote, shall elect a chairperson and vice-chairperson for a one-year term at the beginning of each year, and may reelect the incumbent. The chairperson shall preside over tree board meetings and retain the right to vote. The vice-chairperson shall preside in the chairperson's absence.

(5) Regular meetings shall be held at a frequency necessary to carry out tree board duties. Meetings shall be called at the request of the chairman, or four commissioners, or at the request of the public works or community services departments.

(6) Four members of the tree board shall constitute a quorum for conducting any business.

(7) The tree board may make and alter rules and regulations for its operation consistent with the City Charter, ordinances, and resolutions, subject to review and approval of the council.

(8) Members of the tree board shall receive no compensation, but shall be reimbursed for duly authorized expenses. [Ord. 298, 2001; Ord. 181 § 4, 1992].

8.30.050 Tree board – Duties.

(1) The tree board shall have the primary responsibility to study, investigate, develop, and to update periodically a written plan for the care, preservation, pruning, planting, replanting, removal and disposition of all street and park trees.

(2) As part of the plan, a list of acceptable species shall be developed and maintained for planting as street trees. The species will be divided into three size classes: small, medium, and large. A list of tree species not suitable for planting will also be developed.

(3) The plan developed by the tree board shall be presented to the city council, and upon council acceptance and approval the plan shall constitute the official comprehensive tree plan for the city.

(4) The plan, and the provisions of this chapter, will be reviewed completely at least once in every three-year period after the initial approval.

(5) The tree board may also develop criteria for determining and standards for protecting heritage trees within the city. The purpose of the heritage tree designation is to recognize, foster appreciation of, and protect trees having significance to the community. Criteria may include such things as species rarity, age, size, quality, association with historical events or persons, or scenic enhancement. The tree board shall have the authority to determine, select and identify such trees that qualify as heritage trees. [Ord. 181 § 5, 1992].

8.30.060 Permits.
(1) A permit shall be obtained from the public works director before planting, pruning or otherwise affecting a street tree. There shall be no fee required for this permit.

(2) With a permit, adjacent property owners may plant street trees so long as the selection, location, and planting of such trees is in accordance with this chapter.

(3) Any street tree planted subsequent to adoption of the ordinance codified in this chapter and not in compliance therewith shall be removed at the expense of the person who planted it. [Ord. 181 § 6, 1992].

8.30.070 Planting, maintenance and removal.
(1) The spacing of street trees will be in accordance with the three species size classes as defined in this chapter, and no trees may be planted closer together than the following: small trees, 30 feet; medium trees, 40 feet; and large trees, 50 feet; except in special plantings designed or approved by a landscape architect.

(2) No street trees other than those species listed herein as small trees may be planted under or within 10 lateral feet of any overhead utility wire, or over or within five lateral feet of any underground water line, sewer line, transmission line or other utility.

(3) The distance trees may be planted will be in accordance with the three species size classes, and no trees may be planted closer to any curb or sidewalk than the following: small trees, two feet; medium trees, three feet; and large trees, four feet.

(4) No street trees shall be planted closer than 35 feet of any street corner, measured from the point of nearest intersecting curbs or curblines. No street trees shall be planted closer than 10 feet of any fireplug.

(5) The city shall have the right to plant, prune, maintain and remove trees, plants and shrubs within the lines of all streets, alleys, avenues, lanes, squares and public grounds, as may be necessary to ensure public safety or to preserve or enhance the symmetry and beauty of such public grounds.

(6) The public works director may remove, or cause or order to be removed, any tree or part thereof which is in an unsafe condition or which by reason of its nature is injurious to sewers, electric power lines, gas lines, water lines, or other public improvements, or is affected with any injurious fungus, insect or other pest.

(7) It shall be unlawful as a normal practice for any person, firm, or city department to top any street tree, park tree, or other tree on public property. "Topping" is defined as the severe cutting back of limbs to stubs within the tree's crown to such a degree so as to remove the normal canopy and disfigure the tree. Trees severely damaged by storms or other causes, or certain trees under utility wires or other obstructions where other pruning practices are impractical, may be exempted from this chapter at the determination of the city tree board.

(8) All stumps of street and park trees shall be removed below the surface of the ground so that the top of the stump shall not project above the surface.

(9) Leaf Pick-Up.

(a) The city shall continue to manage and fund the sweeping of streets and public parking lots within the city.

(b) Private property owners and/or occupants shall continue to be responsible for removing leaves collected on awnings, canopies, or building roofs, and for sweeping sidewalks. Leaves may be swept into the streets. [Ord. 181 § 7, 1992].

8.30.080 Protection of trees.

(1) It shall be unlawful for any person to remove, destroy, break, or injure any street tree or park tree.

(2) It shall be unlawful for any person to attach or keep attached to any street or park tree or to the guard or stake intended for the protection of such tree any rope, wire, chain, sign or other device whatsoever, except as a support for such tree.

(3) During the construction, repair, alteration or removal of any building or structure, it shall be unlawful for any owner or contractor to leave any street tree in the vicinity of such building or structure without a good and sufficient guard or protector as shall prevent injury to such tree arising out of or by reason of such construction or removal.

(4) Excavations shall not be placed within six feet of any street tree without approval of the public works director. During such excavation or construction, any such person shall guard any street tree within six feet thereof.

(5) All building material or other debris shall be kept at least four feet from any street tree. [Ord. 181 § 8, 1992].

8.30.090 Appeals.

Any decision under this chapter made by the public works director may be appealed to the tree board. Any decision of the tree board may be appealed to the city council. Appeals must be in writing and filed within 14 days of the decision being appealed. A decision of the city council shall be final. [Ord. 181 § 9, 1992].

SEASIDE

CHAPTER 98: TREES

Section

98.01 Purpose
98.02 Definitions
98.03 Tree Board
98.04 Tree planting
98.05 Heritage trees
98.06 Public tree maintenance and care
98.07 Review by City Council

§ 98.01 PURPOSE.

The purpose of this chapter is to promote and protect the public health, safety, and general welfare by providing for the regulation of the planting, maintenance, and removal of trees in the city.
(Ord. 97-14, passed 6-23-97)

§ 98.02 DEFINITIONS.

For the purpose of this chapter, the following definitions shall apply unless the context clearly indicates or requires a different meaning.

DANGEROUS TREES. A tree that is classified as a dangerous tree by the Tree Board.

HERITAGE TREES. Trees of significant historical value so designated by the Tree Board.

PARK TREES. Trees in public parks having individual names, and all areas owned by the city, or to which the public has free access as a park.

STREET TREES. Trees located in public rights-of-way within the city.
(Ord. 97-14, passed 6-23-97)

§ 98.03 TREE BOARD.

(A) *Creation and establishment.* There is hereby created and established a Tree Board for the city, which shall consist of five members. The members shall be nominated by and ratified with the City Council approval. At least one member of the Tree Board shall be a representative from the field of arboriculture, landscape architecture, or otherwise have a background and professional knowledge of trees and their care. Members shall be residents of the city, or business owner or an employee of a business located within the city.

(B) *Term of office and compensation.* Tree Board members shall each serve a three-year term with the exception of the original members. The term of office of the first member appointed shall expire on June 30, 1998; the terms of office of the second and third members appointed shall expire on June 30, 1999; and the terms of office for the fourth and fifth members appointed shall expire on June 30, 2000. In the event that a vacancy shall occur during the term of any member, his successor shall be appointed for the unexpired portion of the term. Members shall serve without compensation.

(C) *Duties and responsibilities.* It shall be the responsibility of the Tree Board to:

(1) Study, investigate, and develop and/or update annually, a written plan for the care, preservation, pruning, planting, replanting, removal or disposition of trees in parks, along streets, and in other public areas. Such plan will be presented annually to the City Manager and upon City Council acceptance and approval shall constitute the official comprehensive city tree plan for the city. The Tree Board, when requested by the City Council, shall consider, investigate, make findings, report and recommend upon any special matter or question

coming within the scope of its duties and responsibilities,

(2) Develop criteria for city staff and/or contractors to apply in making decisions entrusted to staff and/or contractor discretion,

(3) Designate Heritage Trees on public and private lands within the city,

(4) Promote the planting and proper maintenance of trees through special events including an annual local celebration of Arbor Day, and

(5) Obtain the annual Tree City USA designation by the National Arbor Day Foundation.

(D) *Procedures.* The Tree Board shall elect a chairperson and a vice-chairperson and shall develop its own meeting schedule. A majority of the members shall constitute a quorum. The Tree Board shall keep a journal of its proceedings, which shall be kept on file in the office of the City Manager.

(E) *Review by City Council.* The City Council shall have the right to review the conduct, acts, and decisions of the Tree Board. Any person may appeal any ruling or decision of the Tree Board to the City Council who may hear the matter and make a final decision.
(Ord. 97-14, passed 6-23-97)

§ 98.04 TREE PLANTING.

(A) The Tree Board shall develop and maintain a list of approved trees for planting along streets. The trees will be listed in three size classes based on mature height: small trees (under 30 feet); medium (30 to 50 feet); and large (over 50 feet). A list of trees not suitable for planting will also be created by the Tree Board.

(B) The spacing of street trees will be in accordance with the three species size classes listed in division (A) of this section, and the Tree Board shall develop criteria on the spacing of street trees.

(C) The distance trees may be planted from curbs or curblines and sidewalks will be in accordance with the three species size classes listed in division (A) of this section. No tree may be planted in a planting strip with a width of less than the following: small trees, three feet; medium trees, five feet; and large trees, eight feet. The exception to this rule shall be when curb and sidewalk are protected by a chemical or mechanical barrier approved by the city.

(D) No street tree shall be planted within 25 feet of any street corner, measured from the point of nearest intersecting curbs or curblines. No street tree shall be planted within ten feet of any fireplug.

(E) No street trees other than those species listed as small trees in division (A) of this section may be planted under or within ten feet of any overhead utility wire.
(Ord. 97-14, passed 6-23-97) Penalty, see § 10.99

§ 98.05 HERITAGE TREES.

The Tree Board may designate certain trees as "Heritage Trees" within the city with the consent of the owner of record. The purpose of the Heritage Tree designation is to recognize, foster appreciation of, and protect trees having significance to the community. The Tree Board shall have the authority to determine, select, and identify such trees that qualify as Heritage Trees. Once a tree is designated as a Heritage Tree, it will remain so unless it becomes necessary to classify it as a dangerous tree and remove as such. Heritage Trees may not be removed without the express consent of the Tree Board.
(Ord. 97-14, passed 6-23-97) Penalty, see § 10.99

§ 98.06 PUBLIC TREE MAINTENANCE AND CARE.

The city shall have the right to plant, prune, maintain and remove trees within the lines of all streets, alleys, avenues, lanes, squares and public grounds, as may be necessary to insure public safety or to preserve or enhance the symmetry and beauty of such public grounds. The Tree Board may remove or cause or order to be removed, any tree or part thereof which is in an unsafe condition or which by reason of

its nature is injurious to sewers, electric power lines, gas lines, water lines, or other public improvements, or is affected with any injurious fungus, insect, or other pest. This section does not prohibit the planting of street trees by adjacent property owners providing that the selection and location of said trees is in accordance with § 98.04.

(A) Every owner of any tree, located on private property, overhanging any street or right-of-way within the city shall prune the branches so the branches shall not obstruct the light from any street lamp or obstruct the view of any street intersection, traffic sign, or traffic-control device. The city shall have the right to prune any tree or shrub on private property when it interferes with the light from any street lamp, or interferes with visibility of any traffic-control device or sign or vision clearance area at intersections or driveways.

(B) It shall be unlawful as a normal practice for any person, firm, or city department to top any street tree, park tree, or other tree on public property. Topping is defined as the severe cutting back of limbs to stubs larger than three inches in diameter within the tree's crown to such a degree as to remove the normal canopy and disfigure the tree. Trees severely damaged by storms or other causes, or certain trees under utility wires or other obstructions where other pruning practices are impractical may be exempted from this section at the determination of the Tree Board.

(C) The Tree Board shall have the right to cause the pruning or removal of any dead or dangerous trees on private property within the city, when such trees constitute a hazard to life and property, or harbor insects or disease which constitute an imminent threat to other trees within the city. The City Manager or his designee will notify in writing the owners of such trees. Removal shall be done by said owners at their own expense within 30 days after the date of the written notice. The failure of the property owner to prune or remove said dead or dangerous trees within 30 days of the delivery of notices shall be deemed a violation of the City Code of Ordinances, and the City Manager or his designee may at any time thereafter prune or remove said dead or dangerous tree and assess the cost against the property as provided by the City Code.
(Ord. 97-14, passed 6-23-97)

§ 98.07 REVIEW BY CITY COUNCIL.

The City Council shall have the right to review the conduct, acts, and decisions of the Tree Board. Any person may appeal from any ruling or order of the Tree Board to the City Council who may hear the matter and make final decisions.
(Ord. 97-14, passed 6-23-97)

CITY OF NEWBERG

FENCE AND VISION CLEARANCE REQUIREMENTS HANDOUT

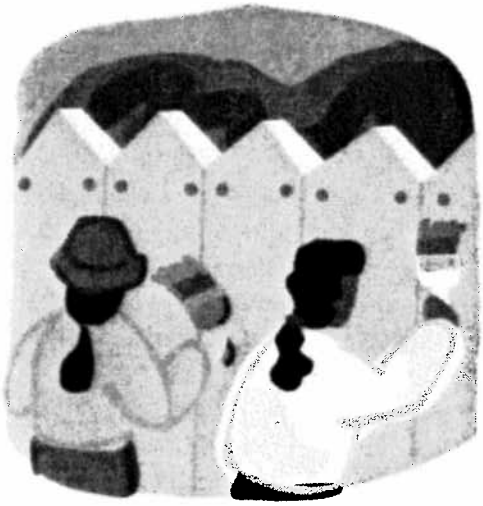

§ 15.410.060 VISION CLEARANCE SETBACK.

The following vision clearance standards shall apply in all zones (see Appendix A,Fig. 9).

(A) At the intersection of two streets, including private streets, a triangle formed by the intersection of the curb lines, each leg of the vision clearance triangle shall be a minimum of 50 feet in length.

(B) At the intersection of a private drive and a street, a triangle formed by the intersection of the curb lines, each leg of the vision clearance triangle shall be a minimum of 25 feet in length.

(C) Vision clearance triangles shall be kept free of all visual obstructions from two and one-half feet to nine feet above the curb line. Where curbs are absent, the edge of the asphalt or future curb location shall be used as a guide, whichever provides the greatest amount of vision clearance.

(D) There is no vision clearance requirement within the commercial zoning district(s) located within the Riverfront (RF) Overlay Sub-district.

(Ord. 2002-2564, 4-15-02; Ord. 99-2507, 3-1-99; Ord. 96-2451, 12-2-96. Code 2001 § 15.410.060).

§ 15.410.070 YARD EXCEPTIONS AND PERMITTED INTRUSIONS.

The following intrusions may project into required yards to the extent and under the conditions and limitations indicated:

(D) Fences and walls.

(1) In the residential district, a fence or wall shall be permitted to be placed at the property line or within a yard setback as follows:

(a) Not to exceed six feet in height. Located or maintained within the required interior yards. For purposes of fencing only, lots that are comer lots or through lots may select one of the street frontages as a front yard and all other yards shall be considered as interior yards, allowing the placement of a six foot fence on the property line. In no case may a fence extend into the clear vision zone as defined in NMC 15.410.060.

(b) Not to exceed four feet in height. Located or maintained within all other front yards.

(2) In any commercial or industrial district, a fence or wall shall be permitted to be placed at the property line or within a yard setback as follows:

(a) Not to exceed eight feet in height. Located or maintained in any interior yard except where the requirements of vision clearance apply. For purposes of fencing only, lots that are corner lots or through lots may select one of the street frontages as a front yard and all other yards shall be considered as interior yards, allowing the placement of an eight foot fence on the property line.

(b) Not to exceed four feet in height. Located or maintained within all other front yards.

(3) If chain link (wire-woven) fences are used, they are manufactured of corrosion proof materials of at least 11 1/2gauge.

(4) The requirements of vision clearance shall apply to the placement of fences.

(Ord. 2002-2561, passed 4-1-02) Penalty, see § 15.05.120).

8.15.110 FENCES.

(A) No owner or person in charge of property shall construct or maintain a barbed-wire fence thereon, or allow barbed wire to remain as part of a fence, along a sidewalk or public way; except such wire may be placed about the top of other fencing not less than six feet, six inches high.

(B) No owner or person in charge of property shall construct, maintain or operate an electric fence along a sidewalk or public way.

(Ord. 1690, passed 3-19-73) Penalty, see § 95.35

FIGURE IX. VISION CLEARANCE.

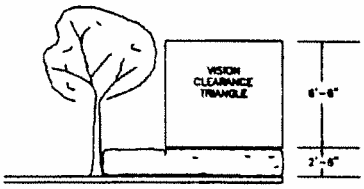

ELEVATION

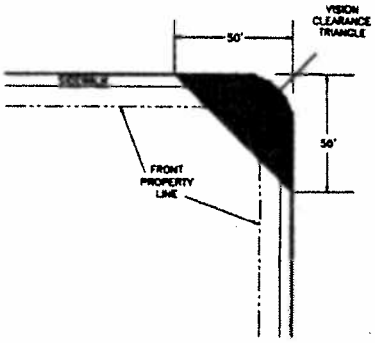

PLAN VIEW

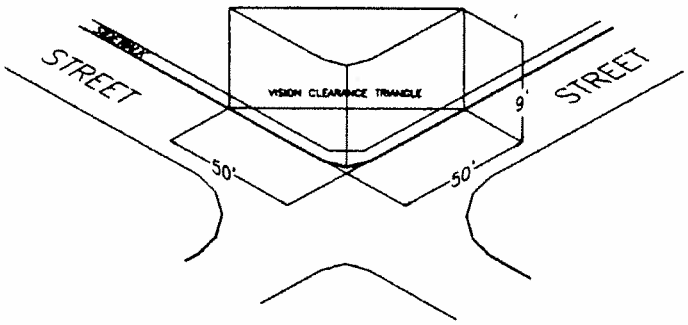

PERSPECTIVE

CITY OF EUGENE

Code Compliance

Vision Clearance EC 9.6780

All street corners have a vision clearance triangle to promote safety by providing an unobstructed view from 30 inches to 9 feet high. No structures, sign, vehicle, landscaping nor any other obstruction can be placed within the vision clearance triangle. The triangle is measured at the point where the two extended curb lines intersect. From that intersection point in the street, measure 35 feet back along each curb line and draw the third line between those two points on the curbs to form the vision triangle.

For complaints about vegetation in a vision clearance triangle or vegetation over a public sidewalk please call Public Works at 682-4800.

(b) Surface stormwater management facilities.

(4) **Special Setback for Utility Easements.** A lot or parcel of land in any zone for which there is a planned utility easement, or where extension of public infrastructure has been identified through long-range infrastructure plans or the design of existing infrastructure, shall have a special building setback line to allow for the future easement.

(Section 9.6750, see chart at front of Chapter 9 for legislative history from 2/26/01 through 6/1/02; amended by Ordinance No. 20457, enacted March 8, 2010, effective April 10, 2010; and Ordinance No. 20460, enacted July 12, 2010, effective August 14, 2010.)

9.6770 **Transit Improvements.**

(1) The location of transit stops shall be based upon the size and trip generation of new development adjacent to an existing or planned transit corridor. The transit operator shall review site plans and may recommend transit-related facilities be constructed for the following developments:

(a) Residential developments having an average peak hour trip rate of 25 trips or greater.

(b) Commercial and industrial developments other than office developments, having an average peak hour trip rate of 100 trips or greater. Office developments generating 50 or more average peak hour trips.

(c) Institutional uses and public facilities, including churches, hospitals, middle schools, high schools, universities and colleges, public parks (other than neighborhood parks), libraries, post offices, and other institutional and public facilities generating 100 or more average peak hour trips.

(2) To the extent it demonstrates consistency with constitutional requirements, the city shall require that the transit-related facilities recommended by the transit operator, and approved by the city manager, be identified on the site plan and constructed at the time of development. Transit-related facilities shall be constructed in accordance with the City of Eugene Arterial and Collector Street Plan.

(Section 9.6770, see chart at front of Chapter 9 for legislative history from 2/26/01 through 6/1/02.)

9.6775 **Underground Utilities.** All new on-site utilities shall be placed underground if there is a utility-owned structure immediately adjacent to the development site, unless adjusted pursuant to the provisions of EC 9.8030(5). This provision does not apply to temporary uses on a development site or to new utility connections to structures or buildings with legally established above ground utility service. This requirement is satisfied if the applicant verifies in writing that utilities will be placed underground concurrent with planned future development to occur within 12 months. Exceptions shall be made for such features as padmounted transformers, switch cabinets, back flow prevention devices and closures needed to safely operate and maintain utility systems.

(Section 9.6775, see chart at front of Chapter 9 for legislative history from 2/26/01 through 6/1/02; and amended by Ordinance No. 20269, enacted November 25, 2002, effective December 25, 2002.)

9.6780 **Vision Clearance Area.** Development sites shall have triangular vision clearance areas on all street corners to provide for unobstructed vision consistent with American Association of State Highway and Transportation Officials (AASHTO)

standards. **(See Figure 9.0500 Vision Clearance Area)**. Vision clearance areas shall be kept free of all visual obstructions from 2 ½ feet to 9 feet above the curb line. Where curbs are absent, the crown of adjacent streets shall be used as the reference point. These vision clearance requirements may be adjusted if consistent with the criteria of EC 9.8030(11) of this land use code.

(Section 9.6780, see chart at front of Chapter 9 for legislative history from 2/26/01 through 6/1/02.)

Figure 9.0500

Vision Clearance Area

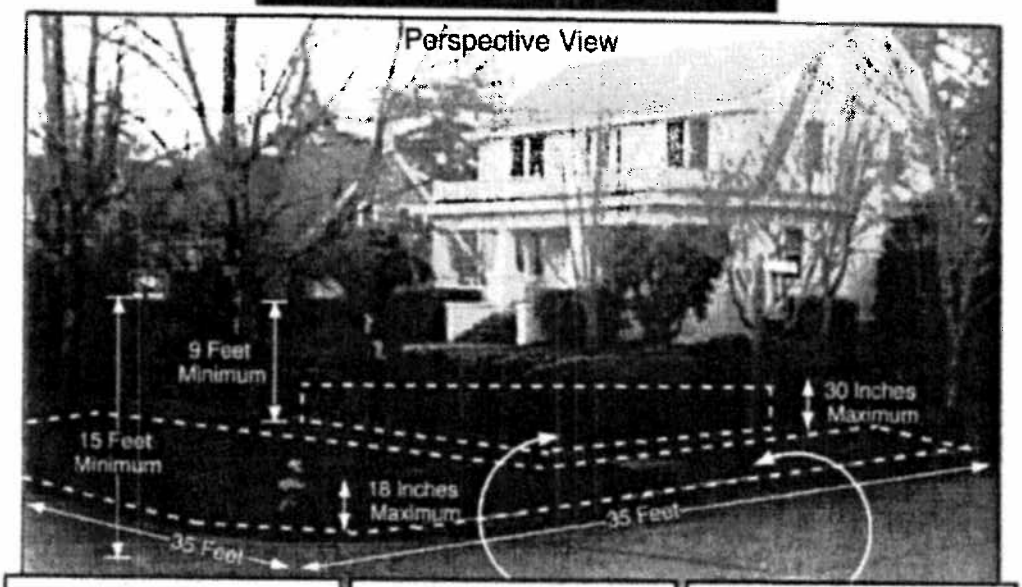

Tree Limb Clearance:
- 9 Feet Minimum Above Sidewalk
- 15 Feet Minimum Above Street

On Private Property, the Clearance Area Extends Through a Triangle at a Maximum Height of 30 Inches

In the Public Right-of-Way, the Clearance Area Extends 35 Feet Along Curb Edge at a Maximum Height of 18 Inches

Plan View

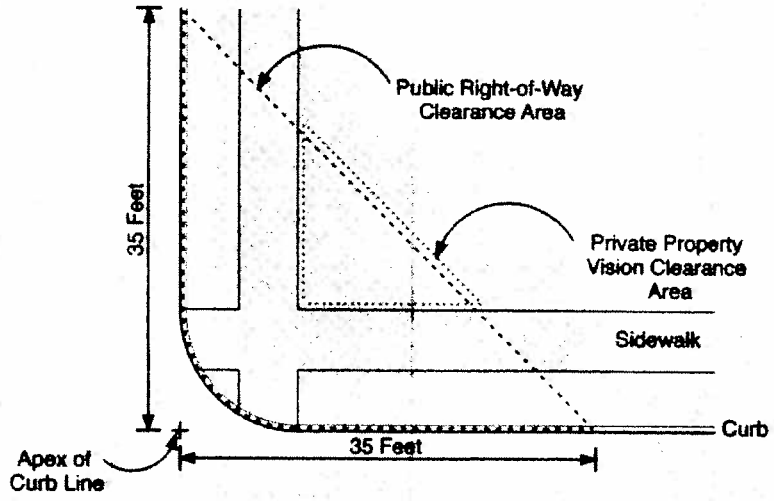

Right-of-Way Clearance Area

Private Property Vision Clearance Area

See also EC 9.6780 Vision Clearance Area.

City of Newport

Community Development Department

Memo

To: Planning Commission/Commission Citizen Advisory Committee

From: Derrick Tokos, Community Development Director

Date: November 23, 2011

Re: Codification of the Newport Zoning Ordinance into the Municipal Code

---

Attached is a matrix outlining targeted "clean-up" changes that I would suggest the Commission consider as part of moving the Zoning Ordinance into the Municipal Code. Also attached is the new table of contents. A complete copy of the draft codified code is available on the Community Development Department website.

None of the proposed changes are included in the draft that is posted on the web. I am hoping that you can take a look at the proposed changes and confirm whether or not they should be made at this point. Also, this is an opportunity for you to point out other needed changes.

This is early in the process, and the draft on the website still has formatting and cross reference issues that need to be resolved. I anticipate that the Commission will need 2-3 work sessions on this package before it is ready for a public hearing.

See you on Monday!

Zoning Ordinance Municipal Code Codification Draft Code Revisions (latest revisions in ~~strikethrough~~ and double underline)	**Rationale for Change**
14.01.010 Definitions As used in this Ordinance, the masculine includes the feminine and neuter, and the singular includes the plural. The following words and phrases, unless the context otherwise requires, shall mean: *** Applicant. A person who applies for a land use action or building permit. An applicant can be the owner of the property or someone who is representing the owner, such as a builder, developer, optional purchaser, consultant, or architect. ***	The term applicant is used throughout the code and should be defined.
~~Condominium Hotel. A building or group of buildings in which lodging—with or without cooking facilities—is available to owners or transient guests for rent, trade, exchange, or other compensation for a period of less than 30 days, that is, upon a tenancy less than a tenancy from month to month, and where more than 20 % of the lodging rooms or units are or may be used or available for residential use or rental for residential purposes on a month-to-month tenancy or a lease or rental agreement for periods of 30 days or more. An approved condominium hotel use simultaneously permits both residential and hotel uses.~~ ***	This term is not utilized outside of the definitions section of the code, other than a brief reference in the Iron Mountain Impact Zone, where it could be removed. The definition for "hotel" should be sufficient.
Dwelling Unit. One or more rooms designed for occupancy by one family ~~only~~ and not having more than one cooking facility.~~, but not including recreational vehicles, hotels, motels, boarding houses, and mobile homes.~~ ***	The uses listed are dwelling units when they have cooking facilities (mobile homes is the best example).

Land Use Action. The procedure by which the City of Newport makes a land use decision.	This term is used throughout the code and should be defined. This allows a distinction to be made between a land use action and a ministerial action.
Land Use Decision.** A ~~land use decision includes a~~ final decision or determination that concerns the adoption, amendment, or application of~~:~~ Statewide Planning Goals, a comprehensive plan provision, a land use regulation, or a new land use regulation, as defined in ORS 197.015. ~~A. The Statewide Planning Goals;~~ ~~B. A comprehensive plan provision;~~ ~~C. A land use regulation; or~~ ~~D. A new land use regulation.~~ ~~A land use regulation does not include a decision which:~~ ~~A. Is made under land use standards that do not require interpretation or the exercise of factual, policy, or legal judgment;~~ ~~B. Approves, approves with conditions, or denies a subdivision or partition as described in ORS Chapter 92, where the decision is consistent with land use standards; or~~ ~~C. Approves or denies a building permit made under land use standards that do not require interpretation or the exercise of factual, policy, or legal judgment.~~ ***	The statutory definition of a land use decision is included below. It is lengthy and has been revised by the legislature from time to time. The City's definition is dated and inaccurate. Including the lead portion of the state's definition in the Newport code provides readers with needed context. The City code should reference the statutory definition though, as it is more detailed. *ORS 197.015 (10) "Land use decision":* *(a) Includes:* *(A) A final decision or determination made by a local government or special district that concerns the adoption, amendment or application of:* *(i) The goals;* *(ii) A comprehensive plan provision;* *(iii) A land use regulation; or* *(iv) A new land use regulation;* *(B) A final decision or determination of a state agency other than the commission with respect to which the agency is required to apply the goals; or* *(C) A decision of a county planning commission made under ORS 433.763;* *(b) Does not include a decision of a local government:* *(A) That is made under land use standards that do not require interpretation or the exercise of policy or legal judgment;* *(B) That approves or denies a building permit issued under clear and objective land use standards;* *(C) That is a limited land use decision;* *(D) That determines final engineering design, construction, operation, maintenance, repair or preservation of a transportation facility that is otherwise authorized by and consistent with the comprehensive plan and land use regulations;* *(E) That is an expedited land division as described in ORS 197.360;* *(F) That approves, pursuant to ORS 480.450 (7), the siting, installation, maintenance or removal of a liquefied petroleum gas*

	container or receptacle regulated exclusively by the State Fire Marshal under ORS 480.410 to 480.460; *(G) That approves or denies approval of a final subdivision or partition plat or that determines whether a final subdivision or partition plat substantially conforms to the tentative subdivision or partition plan; or* *(H) That a proposed state agency action subject to ORS 197.180 (1) is compatible with the acknowledged comprehensive plan and land use regulations implementing the plan, if:* *(i) The local government has already made a land use decision authorizing a use or activity that encompasses the proposed state agency action;* *(ii) The use or activity that would be authorized, funded or undertaken by the proposed state agency action is allowed without review under the acknowledged comprehensive plan and land use regulations implementing the plan; or* *(iii) The use or activity that would be authorized, funded or undertaken by the proposed state agency action requires a future land use review under the acknowledged comprehensive plan and land use regulations implementing the plan;* *(c) Does not include a decision by a school district to close a school;* *(d) Does not include authorization of an outdoor mass gathering as defined in ORS 433.735, or other gathering of fewer than 3,000 persons that is not anticipated to continue for more than 120 hours in any three-month period; and* *(e) Does not include:* *(A) A writ of mandamus issued by a circuit court in accordance with ORS 215.429 or 227.179;* *(B) Any local decision or action taken on an application subject to ORS 215.427 or 227.178 after a petition for a writ of mandamus has been filed under ORS 215.429 or 227.179; or* *(C) A state agency action subject to ORS 197.180 (1), if:* *(i) The local government with land use jurisdiction over a use or activity that would be authorized, funded or undertaken by the state agency as a result of the state agency action has already made a land use decision approving the use or activity; or* *(ii) A use or activity that would be authorized, funded or undertaken by the state agency as a result of the state agency action is allowed*

	without review under the acknowledged comprehensive plan and land use regulations implementing the plan.
Ministerial Action: A decision that does not require interpretation or the exercise of policy or legal judgment in evaluating approval standards. The review of a ministerial action requires no notice to any party other than the applicant and agencies that the Community Development Director, or designee, determines may be affected by the decision. A ministerial action is not a land use decision, as defined in ORS 197.015, and is, therefore, not appealable through Oregon's quasi-judicial process. ***	This term is being introduced to the code and should be defined.
Nursing Home. A nursing home provides 24 hour direct medical, nursing and other health services. Registered nurses, licensed practical nurses, and nurses' aides provide services prescribed by resident(s) physician(s). A nursing home is for those persons who need health supervision but not hospitalization. The emphasis of this use is on nursing care, but convalescent, restorative physical, occupational, speech, and respiratory therapies are also provided. The level of care may also include specialized nursing services such as specialized nutrition, rehabilitation services and monitoring of unstable conditions. The term nursing home is also synonymous with the terms nursing facility and skilled nursing facility. ***	This is a listed use, which should be defined so that there is a clear distinction between a nursing home, residential care home, and residential facility, all of which are regulated in the Newport code.
Primary Structure or Use. A structure or use of chief importance or function on a site. A site may have more than one primary structure or use. ***	Accessory Structure or Use is defined, but Primary structure or Use is not. The proposed definition addresses this oversight.
Residential Care Home. A residential facility, as defined in ORS 443.400, which provides residential care and/or treatment to five or fewer individuals, excluding caregivers, with mental retardation or other developmental disabilities; mental, emotional, or behavioral disturbances; or alcohol or drug dependence. This definition includes the State definitions of "residential training home" and "residential treatment home."	The code does not currently have a definition for residential care home although it is a regulated use. The definition provided ties to appropriate state definitions, and is distinctly different then a "residential facility" due to its more limited occupancy.

***	
Residential Facility.* A facility licensed by or under the authority of the Department of Human ~~Resources~~ Services (~~DHR~~DHS), as defined in ~~per~~ ORS 443.400~~ to 443.460~~, which provides residential care alone or in conjunction with treatment or training or a combination thereof for six to fifteen individuals who need not be related. Required s~~S~~taff persons ~~required to meet DHR licensing requirements~~ shall not be counted in the number of facility residents.~~ and need not be related to each other or to any resident of the residential facility.~~ This definition includes the State definitions of "residential care facility," "residential training facility," and "residential treatment facility." ***	This definition needs updating to align with current statutory language.
Setback. The minimum distance required between a specified object, such as a building and another point. Typically, a setback refers to the minimum distance from a building to a specified property line to provide a required yard. ***	This term is used throughout the code and should be defined.
Street. As defined in Section 13.05.005(J) of the Newport Subdivision Ordinance.~~The entire width between the boundary lines of every way which provides for public use for transportation purposes and the placement of utilities and including the terms "road," "highway," "land," "place," "avenue," "alley," or other similar designation.~~ ***	This definition should match the definition in the subdivision ordinance, which reads as follows: *"Street. A public or private way other than a driveway that is created to provide ingress or egress for persons to one or more lots, parcels, areas, or tracts of land. For the purposes of this section, a "driveway" is a private way that begins at a public right-of-way that is proposed to serve not more than four individual lots/parcels cumulative as the primary vehicular access to those individual lots/parcels.* *1. Alley. A narrow street through a block primarily for vehicular service access to the back or side of properties otherwise abutting on another street.* *2. Arterial. A street of considerable continuity which is primarily a traffic artery among large areas.* *3. Half-street. A portion of the width of a right of way, usually along the edge of a subdivision or partition, where the remaining portion of the*

	street could be provided in another subdivision or partition, and consisting of at least a sidewalk and curb on one side and at least two travel lanes. *4. Marginal Access Street. A minor street parallel and adjacent to a major arterial street providing access to abutting properties, but protected from through traffic.* *5. Minor Street. A street intended primarily for access to abutting properties."*
Yard. An open space on a lot which is unobstructed by any ~~structure~~ building from the ground upward, except as otherwise provided in this ordinance. Yard depth is always measured horizontally and perpendicular to the respective lot line.	This definition should be clarified to note that it applies to buildings, not structures. The term structures include fences, planter boxes, etc., which have always been permissible in yards.
14.09.001 TEMPORARY STRUCTURES PERMITS *** **14.09.040 Temporary Structures for Other Than Special Events.** Notwithstanding any other restrictions and prohibitions in this code, a temporary structure not associated with a special event may be erected subject to the following: *** H. Approval is obtained from the City Building Official if the structure is to be erected for 180 days or longer. I. For temporary structures that are to be placed in one location for 12 or more consecutive months, a~~A~~ bond or cash deposit for the amount required to remove the temporary structure, if not removed in the required time frame, shall be placed in an interest-bearing account in the name of the applicant and the City of Newport. Any bond or cash deposit must be in a form approved by the City Attorney. **14.09.070 Approval Authority.** Unless otherwise provided, placement of temporary structures is subject to review and approval by the Community Development Director ~~using a Type I decision making process~~ as a ministerial action.	The proposed changes regarding the posting of a bond aligns with the city's current operational practices and state building codes. Given the clear and objective nature of the approval criteria, and tight turn around on these requests, it is appropriate to handle them as a ministerial action.

14.11.001 REQUIRED YARDS AND SETBACKS **14.11.010 <u>Required Yards</u>.** A building~~, structure~~, or portion thereof, hereafter erected shall not intrude into the required yard listed in Table A for the zone indicated. *** **14.11.050 <u>General Exceptions to Required Yard</u>.** A. Front Yards.* For all ~~structures~~ buildings in residential zones where lots on the same side of the street having frontage on the same street and comprising 40% or more of the frontage between two intersecting streets are developed with buildings having less than the required front yard setback, the minimum front yard shall be the average front yard depth. In no case, however, shall the required depth be decreased by more than 25% without an adjustment or variance hearing by the Planning Commission. In such a case, a Type III Land Use Action decision process shall be applied consistent with Section 2-6-1, Procedural Requirements, in addition to the requirements of Section 2-5-2, Adjustments and Variances.	This section should be revised so that it is clear that yard requirements apply to buildings, as opposed to all structures.
<u>Alternate language for 14.11.050(A)</u> <u>A. Front Yards. In the event a front yard less than the minimum has been legally established on one or both of the adjacent lots, the minimum front yard for an interior lot may be reduced to the average of what has been established for the adjoining front yards</u>	The current code language is very confusing. This language achieves the same objective and is a little bit clearer.
14.18.001 SCREENING AND BUFFERING BETWEEN RESIDENTIAL AND NON-RESIDENTIAL ZONES *** **2-4-4.010. <u>Adjacent Yard Buffer</u>.** On any portion of a site in a non-residential zone that abuts a residential zone, a minimum interior yard of 10 feet planted and maintained as a landscaped screen shall be required. ~~A solid wall or screening fence between six and eight feet high shall be constructed~~	It seems counterproductive to require a landscape buffer that is screened from view by a fence. The proposed amendment eliminates the fencing requirement. This could also be structured to provide either option (but not both).

~~and maintained by the non-residential property owner along the common property line.~~	
14.21.001 GEOLOGIC HAZARDS OVERLAY *** **14.21.020 <u>Applicability of Geologic Hazards Regulations</u>.** *** D. If the results of a Geologic Report are substantially different than the hazard designations contained in DOGAMI Open File Report O-04-09 then the city shall provide notice to the Department of Geology and Mineral Industries (DOGAMI) and Department of Land Conservation and Development (DLCD). The agencies will have ~~15~~ 14 days to provide comments and the city shall consider agency comments and determine whether or not it is appropriate to issue a Geologic Permit.	Recommend all comment periods be 14 days. This is consistent with notice requirements in the Subdivision Ordinance and prevents the last day to comment from landing on a weekend day.
14.24.001 BEACH AND SAND DUNE AREAS ---------- **14.24.015. Applicability.** Compliance with the approval criteria contained in this section is required for development proposed within beach or dune areas identified on the Ocean Shorelands Map contained in the Comprehensive Plan. ---------- **14.24.020. <u>Procedure for Review</u>.** **14.** Applications for land use actions in beach and dune areas shall by accompanied by a site-specific report prepared by a qualified expert. Beach and dune site reports shall conform to the requirements set forth in Section 2-4-10.015. B. Site reports for beach and dune areas shall be reviewed in accordance with the review requirements for the land use action being proposed (e.g. building	This section needs a fair amount of work; however, as part of the codification project it may be enough to call out the maps that identify beach and dune areas and to establish a review procedure.

permit, subdivision, etc.). C. Upon acceptance of the application, the Community Development Department shall process the request in accordance with a Type II Land Use Action decision process consistent with Section 14.43.020.	
14.28.001 IRON MOUNTAIN IMPACT AREA *** **14.28.070 Uses Prohibited in an R-4/"High Density Multi-Family Residential" Zoning District.** The following uses are prohibited in the Iron Mountain Impact Area: A. Hospitals. B. Schools, Libraries, Colleges, Churches, Clubs, Lodge Halls, and Museums. C. Motels, Hotels, ~~Condominium Hotels,~~ and Time-Share Projects. D. Bed and Breakfast Facilities. E. Boarding, Lodging, or Rooming Houses. F. Golf Courses. G. Recreational Vehicle Parks. H. Hostels. I. Any other use not listed in the permitted list contained in Section 14.28.060 of this Ordinance. **14.28.080. Uses in the Impact Area that are zoned I-2 or I-3.**** **14.28.090 through 14.28.150 Uses Permitted Outright and Conditionally in the IMIA** *[The above sections would be redrafted to remove all references to SIC based industrial classification. This will eliminate several pages of code.]*	Eliminates reference to Condominium Hotel, which is a definition that is proposed to be deleted. The industrial zones include references to SIC based industrial classifications. If the Planning commission agrees, these sections can be streamlined by replacing those references with the new industrial use categories.
14.30.001 DESIGN REVIEW STANDARDS *** **14.30.080 Procedural Requirements**	Recommend all comment periods be 14 days. This is consistent with notice requirements in the Subdivision Ordinance and prevents the last day to comment from landing on a weekend day.

*** B. Procedural requirements for design review applications only (not consolidated with another land use application): *** 3. Persons subject to notice shall be given ~~15~~ 14 days from the date the notices are mailed to make comment. Comments must be in writing and must be received by the Community Development Director by 5:00 p.m. on the 15th day. If the 15th day falls on a weekend or legal holiday, the deadline for comments shall be extended to 5:00 p.m. on the next business day.	
14.37.001 ANNEXATIONS *** **14.37.010 Purpose.** It is the purpose of this section to establish and define annexation terms, criteria, and procedures for when a request is made of the City to annex territory. It is further the purpose of this section to implement the Comprehensive Plan. This section does not apply to City initiated annexations pursuant to ORS Chapter 222.	This section of the code is written for handling annexation petitions. Clarifying language should be added to point out that there are other procedures in state law that a city can utilize to initiate annexations, and that this section does not apply to those options (e.g. annexation of unincorporated territory surrounded by a city per ORS 222.750).
14.40.001 PDR, PLANNED DESTINATION RESORT *** **14.40.090. Procedure for Modification of a Conceptual Master Plan** *** B. The Planning Director may refer to the Planning Commission the decision as to whether a change in the CMP is substantial. The Planning Commission shall render a determination on all such referrals unless the City Council, within ~~15~~ 14 days from the date of the notice by the Planning Director, in the manner provided below, elects to review the Planning Director's decision to refer the issue to the Planning Commission. The Planning Director shall notify by mail the members of the City Council as to the decision of the Planning Commission.	Recommend all comment periods be 14 days. This particular provision is unlikely to be used often.

C. The decision of the Planning Director or the Planning Commission shall be final, unless within ~~15~~ 14 days a majority of the City Council members then present and voting elect to have the issue considered by the City Council. In such event, the City Council shall thereafter consider the issue at a public meeting. The developer shall be notified of the date, time, and place of the public meeting, and the developer shall have an opportunity to submit written or oral testimony on the issue at the public meeting.

***

14.40.110 Procedure for Approval of PDP.

***

Any person having standing (as defined in Section 14.43.001) may appeal the decision of the Planning Commission in the manner provided in Section 14.43.001. A majority of the City Council present and voting at a regular or special City Council meeting within ~~15~~ 14 days from the date of the decision by the Planning Commission may elect to review the decision of the Planning Commission. Review of the Planning Commission's decision by the City Council shall not be considered an appeal, and no appeal fee shall be required.

***

14.40.120 Procedure for Modification of an Approved Preliminary Development Plan.

***

B. The Planning Director may refer to the Planning Commission the decision as to whether a change in the PDP is substantial. The Planning Commission shall render a determination on all such referrals unless the City Council, within ~~15~~ 14 days from the date of the notice by the Planning Director in the manner provided below, elects to review the Planning Director's decision to refer the issue to the Planning Commission. The Planning Director shall notify by mail the members of the City Council as to the decision of the Planning Commission.

C. The decision of the Planning Director or the Planning Commission shall be final, unless within ~~15~~ 14 days a majority of the City Council members then present and voting elect to have the issue considered by the City Council. Review of the Planning Commission's decision by the City Council shall not be considered an appeal, and no appeal fee shall be required. In such event, the City Council shall thereafter consider the issue at a public meeting. The developer shall be notified of the date, time, and place of the public meeting, and the developer shall have an opportunity to submit written or oral testimony on the issue at the public meeting. *** **14.40.140 Procedure for Approval of a FDP.** *** The decision of the Planning Commission shall be final, unless within ~~15~~ 14 days a majority of the City Council members then present and voting elect to have the issue considered by the City Council. Review of the Planning Commission's decision by the City Council shall not be considered an appeal, and no appeal fee shall be required. In such event, the City Council shall thereafter consider the issue at a public meeting. The developer shall be notified of the date, time, and place of the public meeting, and the developer shall have an opportunity to submit written or oral testimony on the issue at the public meeting.	
14.43.001 PROCEDURAL REQUIREMENTS *** **14.43.060 Notice.** The notification requirements in general for the various types of land use actions are identified below. The applicant shall provide city staff with the required names and addresses for notice. Notice of hearings to individual property owners is not required for Type IV legislative actions unless required by state law, such as ORS 227.186 (notice to owners whose property is rezoned). These notification requirements are in addition to any other notice requirements imposed by state law or city ordinance.	Recommend all comment periods be 14 days. This is consistent with notice requirements in the Subdivision Ordinance and prevents the last day to comment from landing on a weekend day.

*** C. Mailing of Notice. Notices of hearings and actions shall be mailed by first class mail at least ~~15~~ 14 days prior to the deadline for providing testimony for Type II decisions and at least 20 days prior to the public hearing for Type III and Type IV quasi-judicial actions. Notices shall be mailed to:	

TITLE 14 ZONING

CHAPTER 1 GENERAL

14.01.010 Purpose
14.01.020 Definitions

CHAPTER 2 ESTABLISHMENT OF ZONING CODES

14.02.010 Establishment of Zoning Codes
14.02.020 Establishment of Zoning Map
14.02.030 Zone Boundaries

CHAPTER 3 ZONING DISTRICTS

14.03.010 Zoning Districts
14.03.020 Purpose
14.03.030 Establishment of Zoning Districts
14.03.040 City of Newport Zoning Map
14.03.050 Intent of Zoning Districts
14.03.060 Residential Uses
14.03.070 Commercial and Industrial Districts
14.03.080 Commercial and Industrial Uses
14.03.090 Water-Dependent and Water-Related Uses
14.03.100 Uses in State Park Master Plans
14.03.110 Public Uses
14.03.120 Uses in State Park Master Plans

CHAPTER 4 MANAGEMENT UNIT DISTRICTS

14.04.010 Purpose
14.04.020 Definitions
14.04.030 Uses Permitted
14.04.040 Application of Standards
14.04.050 Application Information
14.04.060 Review Notice
14.04.070 Estuarine Use Review Procedure
14.04.080 Estuarine Use Standards
14.04.090 Resource Capability Determinations
14.04.100 Structures
14.04.110 Dredging
14.04.120 Shoreline Stabilization
14.04.130 Fill
14.04.040 Marina and Port Facilities
14.04.150 Aquaculture

14.04.160	Mineral and Aggregate Extraction
14.04.170	Dikes
14.04.180	Outfalls
14.04.190	Submerged Crossings
14.04.200	Restoration
14.04.210	Excavation
14.04.220	Dredged Material Disposal
14.04.230	Water Handling of Logs
14.04.240	Temporary Alteration

CHAPTER 5 MANAGEMENT UNIT SPECIAL POLICIES

14.05.010	Management Unit No. 1
14.05.020	Management Unit No. 2
14.05.030	Management Unit No. 3
14.05.040	Management Unit No. 4
14.05.050	Management Unit No. 5
14.05.060	Management Unit No. 6
14.05.070	Management Unit No. 7
14.05.080	Management Unit No. 8
14.05.090	Management Unit No. 9-A
14.05.100	Management Unit No. 10-A
14.05.110	Permitted Use Matrices

CHAPTER 6 MANUFACTURED DWELLINGS AND RECREATIONAL VEHICLES

14.06.010	Purpose
14.06.020	Manufactured Dwellings on Individual Lots
14.06.030	Manufactured Dwelling Park Standards
14.06.040	Manufactured Dwelling Parks
14.06.050	Recreational Vehicles: General Provisions
14.06.060	Recreational Vehicle Parks

CHAPTER 7 RESERVED

CHAPTER 8 RESERVED

CHAPTER 9 TEMPORARY STRUCTURE PERMITS

14.09.010	Purpose
14.09.020	Special Events Structures

14.09.030	Temporary Living Quarters
14.09.040	Temporary Structures for Other than Special Events
14.09.050	Temporary Vending Carts
14.09.060	Permits Not Transferable Unless Approved
14.09.070	Approval Authority
14.09.080	Application Submittal Requirements
14.09.090	Fire Marshal Inspection
14.09.100	Construction Trailer Exemption

CHAPTER 10 HEIGHT LIMITATIONS

14.10.010	Height Limitations
14.10.020	General Exceptions to Building Height Limitations
14.10.030	Special Exceptions to Building Height Limitations

CHAPTER 11 REQUIRED YARDS AND SETBACKS

14.11.010	Required Yards
14.11.020	Required Recreation Areas
14.11.030	Garage Setback
14.11.040	Yards for Group Buildings
14.11.050	General Exceptions to Required Yard

CHAPTER 12 MINIMUM LOT SIZE

14.12.010	Minimum Size
14.12.020	General Exceptions to Lot Size Requirements

CHAPTER13 DENSITY LIMITATIONS

14.13.010	Density Limitations

CHAPTER 14 PARKING, LOADING, AND ACCESS REQUIREMENTS

14.14.010	Purpose
14.14.020	Definitions
14.14.030	Number of Parking Spaces Required
14.14.040	Parking Requirements for Uses Not Specified
14.14.050	Accessible Parking

14.14.060	Compact Spaces
14.14.070	Bicycle Parking
14.14.080	Shared Parking
14.14.090	Parking Lot Standards
14.14.100	Special Area Parking Requirements
14.14.110	Loading and Unloading Areas
14.14.120	Access
14.14.130	Variances
CHAPTER 15	**RESIDENTIAL USES IN NONRESIDENTIAL ZONING DISTRICTS**
14.15.010	Purpose
14.15.020	Residential Uses in Nonresidential Zoning Districts
CHAPTER 16	**ACCESSORY USES AND STRUCTURES**
14.16.010	Purpose
14.16.020	General Provisions
14.16.030	Accessory Use or Structure on a Separate Lot or Parcel
14.16.040	Development Standards
CHAPTER 17	**VISION CLEARANCE REQUIREMENT**
14.17.010	Front Yard Vision Clearance
14.17.020	Vision Clearance for Corner Lots
14.17.030	Obstruction of Front Yards by Certain Vehicles Prohibited
CHAPTER 18	**SCREENING AND BUFFERING BETWEEN RESIDENTIAL AND NON-RESIDENTIAL ZONES**
14.18.010	Height Buffer
14.18.020	Adjacent Yard Buffer
14.18.030	Separated Yard Buffer
CHAPTER 19	**LANDSCAPING REQUIREMENT**
14.19.010	Purpose
14.19.020	Definitions
14.19.030	Applicability
14.19.040	General Requirements

14.19.050	Landscaping Required for New Development - Exceptions
14.19.060	Landscaping Requirements for Additions and Remodels
14.19.070	Nye Beach
14.19.080	City Center and Bayfront
14.19.090	Maintenance of Required Landscaping
14.19.100	Variances

CHAPTER 20 FLOOD HAZARD AREA

14.20.010	Purpose
14.20.020	Definitions
14.20.030	General Provisions
14.20.040	Administration
14.20.050	Provisions for Flood Hazard Reduction
14.20.060	Appeals and Variance Procedures

CHAPTER 21 GEOLOGIC HAZARDS OVERLAY

14.21.010	Purpose
14.21.020	Applicability of Geologic Hazards Regulations
14.21.030	Geologic Permit Required
14.21.040	Exemptions
14.21.050	Application Submittal Requirements
14.21.060	Geologic Report Guidelines
14.21.070	Construction Limitations within Geologic Hazard Areas
14.21.080	Prohibited Development on Beaches and Foredunes
14.21.090	Erosion Control Measures
14.21.100	Storm Water Retention Facilities Required
14.21.110	Approval Authority
14.21.120	Appeals of Geologic Permits
14.21.130	Certification of Compliance
14.21.140	Removal of Sedimentation
14.21.150	Applicability of Nonconforming Use Provisions

CHAPTER 22 AIRPORT RESTRICTED AREA

14.22.010	Definitions
14.22.020	Airport Zones
14.22.030	Airport Zone Height Limitations
14.22.040	Use Restriction
14.22.050	Nonconforming Uses

14.22.060 Permits
14.22.070 Lane Uses Within Airport Zones
14.22.080 Obstruction Zone
14.22.090 Approach Zone
14.22.100 Clear Zones
14.22.110 Moderate Noise Impact (Ldn 55-65) Zones
14.22.120 Substantial Noise Impact (Ldn 65+) Zones
14.22.130 Airport Development Zone

CHAPTER 23 HISTORIC BUILDINGS AND SITES

14.23.010 Purpose
14.23.020 Notice
14.23.030 Hearing Required
14.23.040 Alterations Prohibited

CHAPTER 24 BEACH AND SAND DUNE AREAS

14.24.010 Purpose
14.24.020 Procedure for Review
14.24.030 Site Report Requirements
14.24.040 Review Criteria

CHAPTER 25 BED AND BREAKFAST FACILITIES

14.25.010 Purpose
14.25.020 Standards

CHAPTER 26 MAINTENANCE OF PUBLIC ACCESS

14.26.010 Maintenance of Public Access

CHAPTER 27 HOME OCCUPATIONS

14.27.010 Purpose
14.27.020 Permitted Uses
14.27.030 Standards
14.27.040 Home Occupation Agreement
14.27.050 Business License Required
14.27.060 Revocation

CHAPTER 28 IRON MOUNTAIN IMPACT AREA

14.28.010	Purpose
14.28.020	Establishment of an Iron Mountain Impact Area Overlay Zone
14.28.030	Uses Permitted in an I-1"Light Industrial" Zoning District
14.28.040	Conditional Uses Permitted in an I-1/"Light Industrial" Zoning District
14.28.050	Uses Prohibited in an I-1/"Light Industrial" Zoning District
14.28.060	Uses Permitted in an R-4/"High Density Multi-Family Residential" Zoning District
14.28.070	Uses Prohibited in an R-4/"High Density Multi-Family Residential" Zoning District
14.28.080	Uses in the Impact Area that are Zoned I-2 or I-3
14.28.090	Uses Permitted Outright and Conditionally in an I-2/"Medium Industrial" Zoning District
14.28.100	Uses Permitted in an I-2/"Medium Industrial" Zoning District with Conditions for the IMIA
14.28.110	Uses Permitted in an I-2"/Medium Industrial" Zoning District with Conditions in the IMIA
14.28.120	Uses Prohibited in an I-2/"Medium Industrial" Zoning District
14.28.130	Uses Permitted in an I-3/"Heavy Industrial" Zoning District
14.28.140	Uses Permitted in an I-3/"Heavy Industrial" Zoning District with Conditions in the IMIA
14.28.150	Uses Permitted in an I-2/"Heavy Industrial" Zoning District with Conditions in the IMIA
14.28.160	Uses Prohibited in an I-3/"Heavy Industrial" Zoning District
14.28.170	Change of Zone or Use in the Iron Mountain Impact Area
14.28.180	Iron Mountain Impact Area Development Requirements
14.28.190	Iron Mountain Impact Area Review Procedure

CHAPTER 30 DESIGN REVIEW STANDARDS

14.30.010	Purpose
14.30.020	Definitions

14.30.030	Council Review of Design Review Districts and Implementing Regulations
14.30.040	Design Review Districts: Overlay Zones Established
14.30.050	Adoption of Design Review: Guidelines and Standards
14.30.060	Special Zoning Standards in Design Review Districts
14.30.070	When Compliance with Design Review is Required
14.30.080	Review Authority, Approval, Appeal, and Modification
14.30.090	Submittal Requirements
14.30.100	Procedural Requirements
14.30.110	Time Limit on Design Review Permit

CHAPTER 31 TOWNHOUSES

14.31.010	Purpose
14.31.020	Definitions
14.31.030	Zoning Districts Where Townhouses are Located
14.31.040	Density
14.31.050	Number of Units in Building
14.31.060	Development Standards
14.31.070	Access
14.31.080	Deed Covenant and Maintenance Agreements
14.31.090	Process
14.31.100	Exception for Reconstruction or Repair of Non-Conforming Townhouse Developments

CHAPTER 32 NON-CONFORMING USES, LOTS, AND STRUCTURES

14.32.010	Purpose
14.32.020	General Provisions
14.32.030	Approval Authority
14.32.040	Application Submittal Requirements
14.32.050	Non-Conforming Lots
14.32.060	Verification of Status of Non-Conforming Use or Structure
14.32.070	Alteration, Expansion, or Replacement of Non-Conforming Uses or Structures

14.32.080 Alteration, Expansion, or Replacement Due to Casualty Loss or Health, Safety, and Related Standards

CHAPTER 33 ADJUSTMENTS AND VARIANCES

14.33.010 Purpose
14.33.020 General Provisions
14.33.030 Approval Authority
14.33.040 Application Submittal Requirements
14.33.050 Criteria for Approval of an Adjustment
14.33.060 Criteria for Approval of a Variance

CHAPTER 34 CONDITIONAL USES

14.34.010 Purpose
14.34.020 General Provisions
14.34.030 Approval Authority
14.34.040 Application Submittal Requirements
14.34.050 Criteria for Approval of a Conditional Use

CHAPTER 35 PD - PLANNED DEVELOPMENTS

14.35.010 Purpose
14.35.020 Permitted Uses
14.35.030 Accessory Uses in Planned Development
14.35.040 Pre-Application Conference
14.35.050 Application Submission
14.35.060 Submittal Requirements for Preliminary Development Plans
14.35.070 Criteria for Approval of a Preliminary Development Plan
14.35.080 Approval of the Final Development Plan
14.35.090 Submittal Requirements for a Final Development Plan
14.35.100 Criteria for Approval of a Final Development Plan
14.35.110 Procedure for Modification of a Planned Development
14.35.120 Control of the Development After Completion
14.35.130 Appeal

CHAPTER 36 AMENDMENTS TO THE ZONING ORDINANCE

14.36.010	General
14.36.020	Initiation of Amendment
14.36.030	Filing of Zone Change Petitions
14.36.040	Record of Amendments

CHAPTER 37 ANNEXATIONS

14.37.010	Purpose
14.37.020	Definitions
14.37.030	Filing of Application
14.37.040	Criteria
14.37.050	Review and Procedure
14.37.060	Zoning Upon Annexation

CHAPTER 39 DREDGED MATERIAL DISPOSAL SITES

14.39.010	Purpose
14.39.020	Information Required
14.39.030	Special Notice Requirement
14.39.040	Standards

CHAPTER 40 PDR - PLANNED DESTINATION RESORT

14.40.010	Applicability of Planned Destination Resort Regulations
14.40.020	Purpose
14.40.030	Uses Permitted Outright
14.40.040	Accessory Uses in Planned Destination Resorts
14.40.050	General Requirements
14.40.060	Application Submission
14.40.070	Procedure for Conceptual Master Plan (CMP) Application
14.40.080	Procedure for Approval of the Conceptual Master Plan
14.40.090	Procedure for Modification of a Conceptual Master Plan
14.40.100	Procedure for Preliminary Development Plan (PDP) Application
14.40.110	Procedure for Approval of Preliminary Development Plan

14.40.120	Procedure for Modification of an Approved Preliminary Development Plan
14.40.130	Procedure for Final Development Plan (FDP) Application
14.40.140	Procedure for Approval of a Final Development Plan
14.40.150	Administration of the Final Development Plan
14.40.160	Provision of Streets, Utilities, Developed Recreational Facilities, and Visitor-Oriented Accommodations
14.40.170	Expiration

CHAPTER 41 ASSISTED LIVING FACILITIES IN R-2 ZONES

14.41.010	Applicability
14.41.020	Purpose
14.41.030	Standards

CHAPTER 42 SOUTH BEACH OPEN SPACE OVERLAY ZONE

14.42.010	Purpose
14.42.020	Procedure
14.42.030	Criteria
14.42.040	Uses Permitted

CHAPTER 43 PROCEDURAL REQUIREMENTS

14.43.010	Purpose
14.43.020	Description of Land Use Actions/Decision-Making Procedures
14.43.030	Approving Authorities
14.43.040	Application for a Land Use Action
14.43.050	Submittal of Applications
14.43.060	Notice
14.43.070	Staff Reports
14.43.080	Hearings Procedures (Quasi-Judicial/Limited Land Use)
14.43.090	Public Hearings Procedures (Legislative)
14.43.100	Appeals
14.43.110	Decision Time
14.43.120	Conditions of Approval
14.43.130	Consolidated Procedure

14.43.140 Expiration and Extension of Decision
14.43.150 Revocation of Decisions
14.43.160 Applicability in the Event of Conflicts

CHAPTER 44 COUNCIL REVIEW

CHAPTER 45 APPLICABILITY OF THE PROVISIONS OF THIS ORDINANCE

CHAPTER 46 COMPLIANCE WITH ORDINANCE PROVISIONS

CHAPTER 47 ENFORCEMENT

CHAPTER 48 PENALTY

CHAPTER 49 INTERPRETATION

CHAPTER 50 SEVERABILITY

CHAPTER 51 FEES