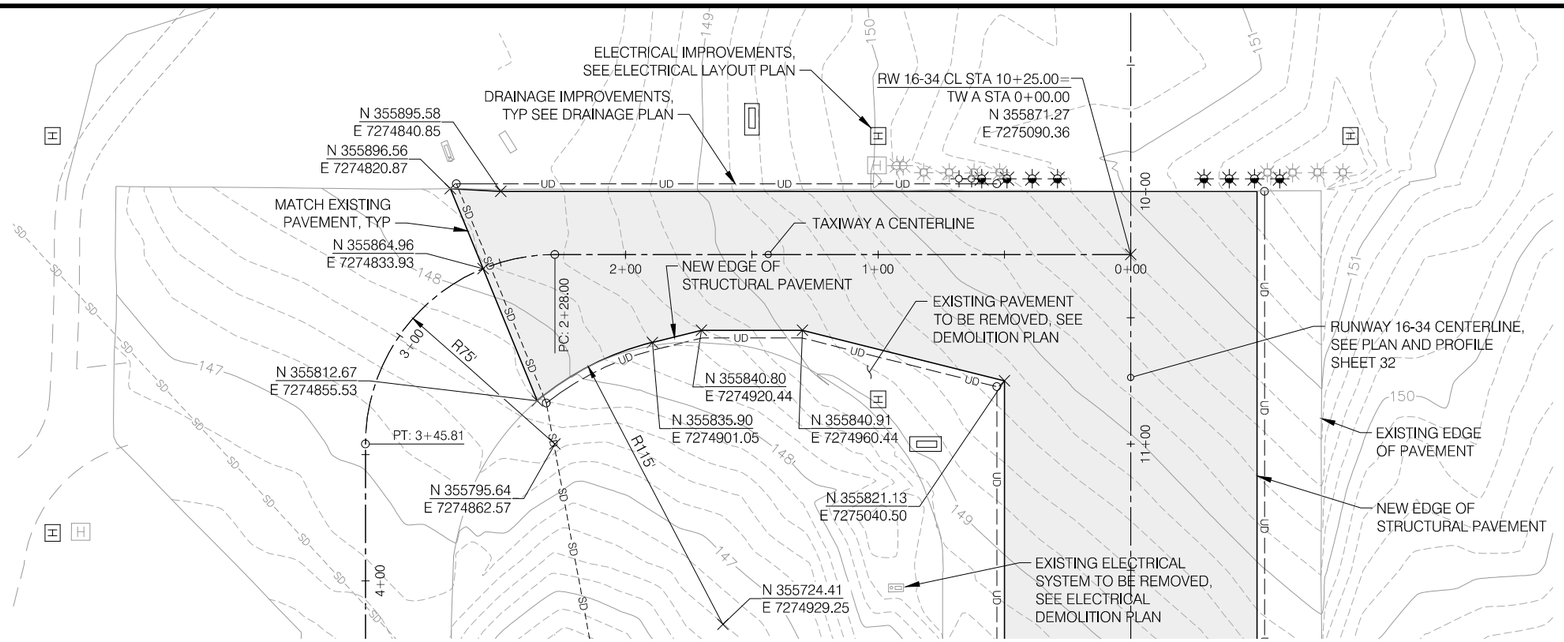


TAXIWAY A PLAN

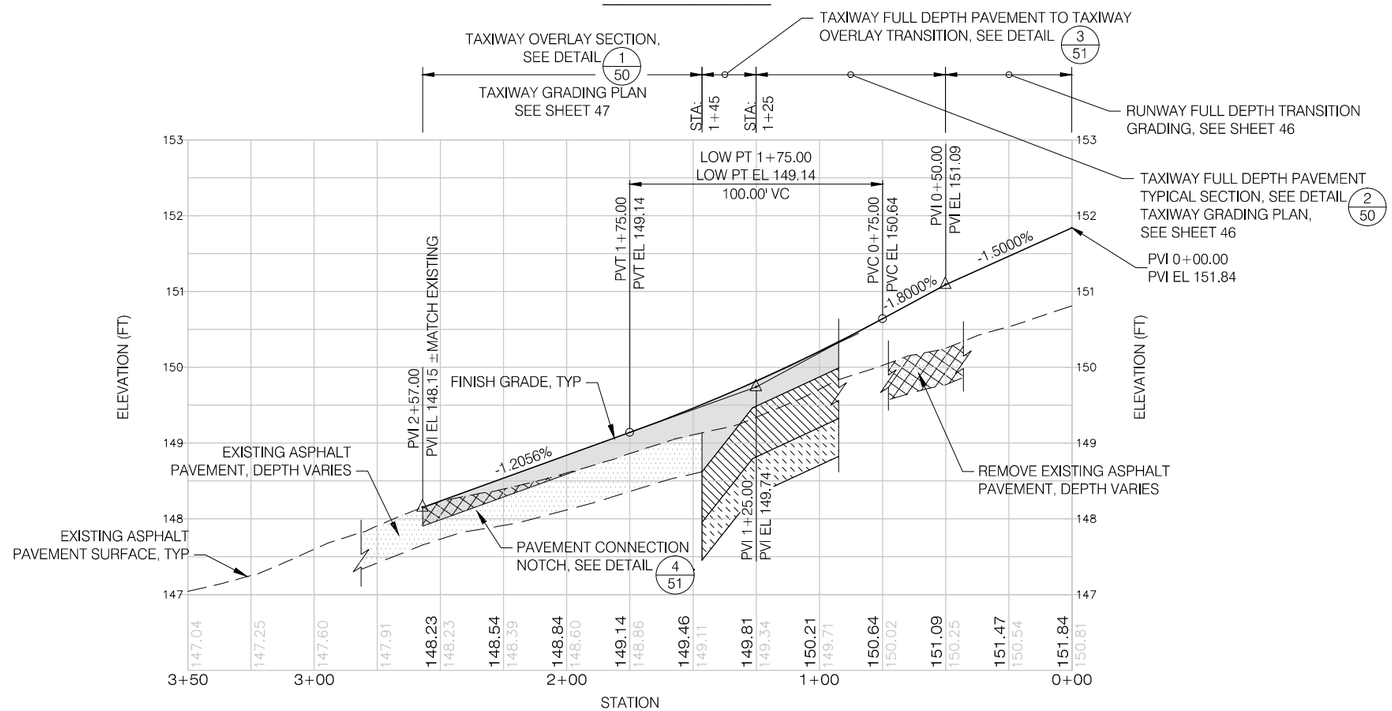


TAXIWAY A PROFILE

PRECISION APPROACH ENGINEERING
5125 Southwest Hout Street
Corvallis, OR 97333
541•754•0043

REGISTERED PROFESSIONAL ENGINEER 72693PE OREGON JUNE 14, 2007 GEOFF W. VAUGHN
EXPIRES 6/30/2014

REVISIONS: DATE APPD.

| | |
|---|---|
| DATE: | JUNE 2013 |
| DESIGN: | TLK |
| DRAWN: | JAW |
| CHECKED: | GWV |
| REVISION NUMBER: | 0 |
| SCALE: AS SHOWN | |

NEWPORT MUNICIPAL AIRPORT
RUNWAY 16-34 REHABILITATION

# TAXIWAY A PLAN AND PROFILE

PRECISION APPROACH ENGINEERING, INC.
AIP NO. 3-41-0040-021

PROJECT NUMBER: NPT008

SHEET NO. 37 OF 108

06/11/13 - 9:30pm - jwade - P:\N\NPT008-RW 16-34 Rehab-Dsn\0400CAD\DWG\Sheets\NPT008-TW-PlanProfile.dwg

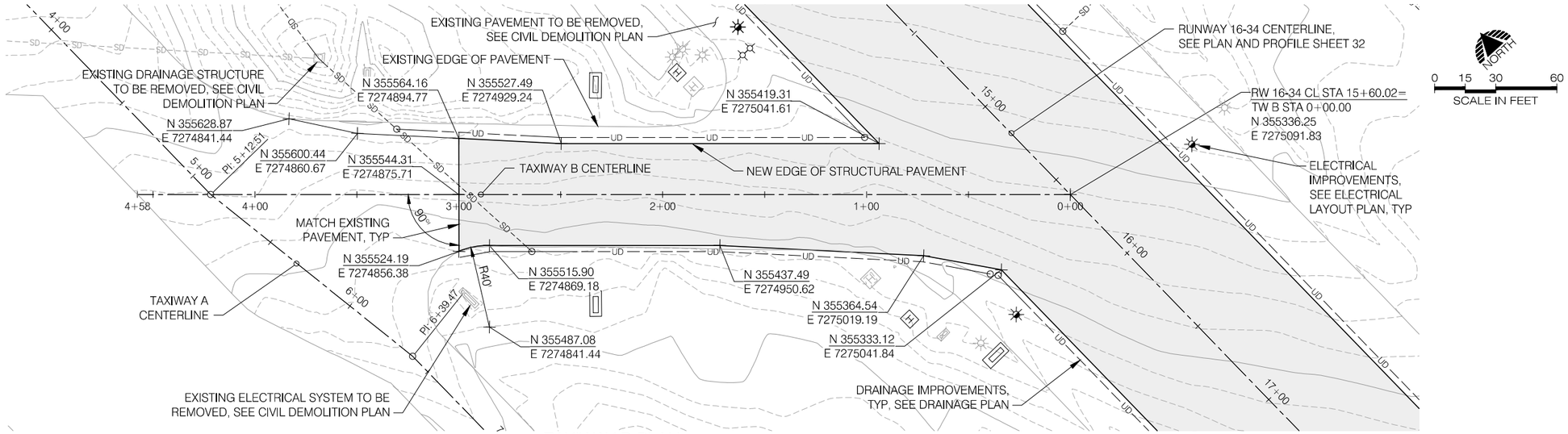


## TAXIWAY B PLAN

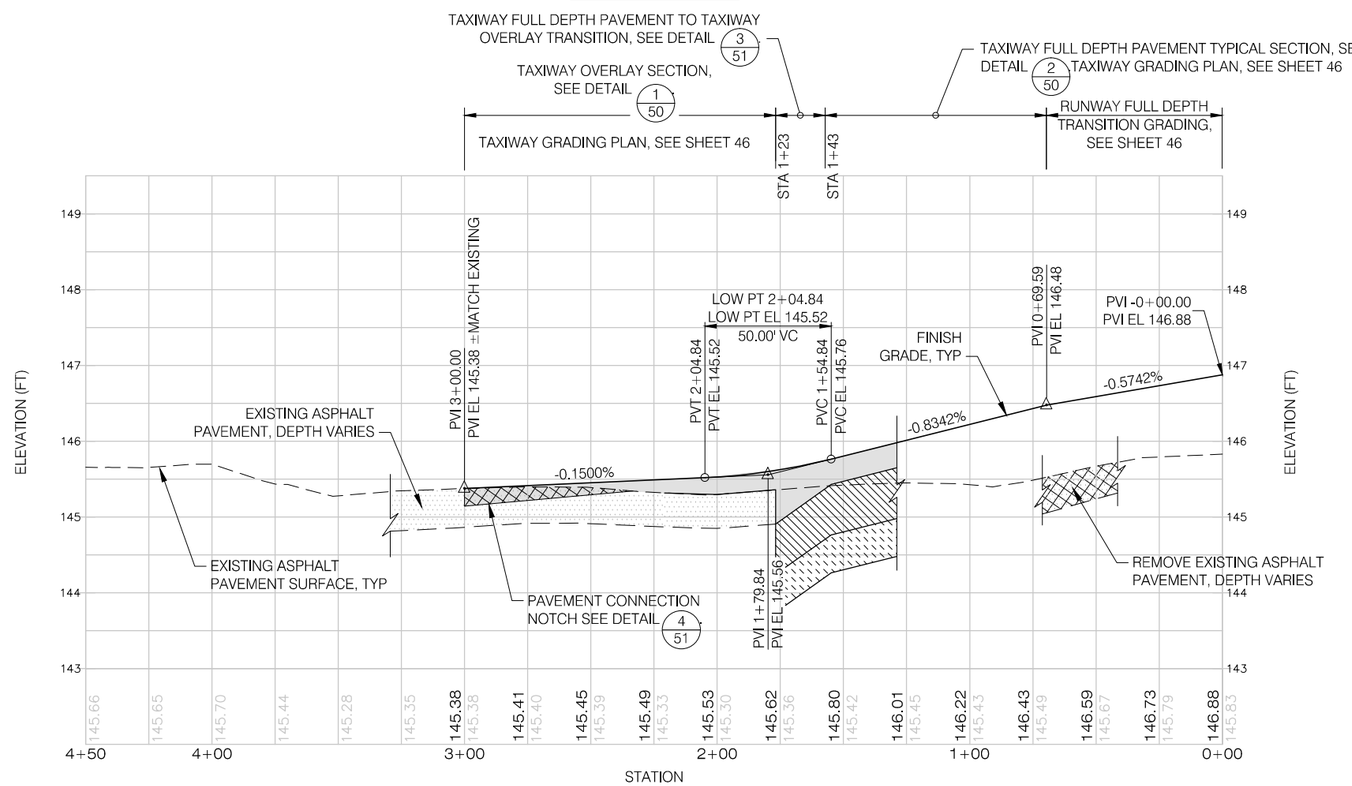


## TAXIWAY B PROFILE


PRECISION APPROACH ENGINEERING
5125 Southwest Hout Street
Corvallis, OR 97333
541•754•0043


REGISTERED PROFESSIONAL ENGINEER 72693PE OREGON JUNE 14, 2007 GEOFF W. VAUGHN
EXPIRES 6/30/2014

REVISIONS: DATE APPD.

| | |
|---|---|
| DATE: | JUNE 2013 |
| DESIGN: | TLK |
| DRAWN: | JAW |
| CHECKED: | GWV |
| REVISION NUMBER: | 0 |
| SCALE: AS SHOWN | |

NEWPORT MUNICIPAL AIRPORT
RUNWAY 16-34 REHABILITATION

# TAXIWAY B PLAN AND PROFILE

PRECISION APPROACH ENGINEERING, INC.
AIP NO. 3-41-0040-021

PROJECT NUMBER: NPT008

SHEET NO. 38 OF 108

06/11/ 13 - 9:30pm - jwade - P:\N\NPT008-RW 16-34 Rehab-Dsn\0400CAD\DWG\Sheets\NPT008-TW-PlanProfile.dwg

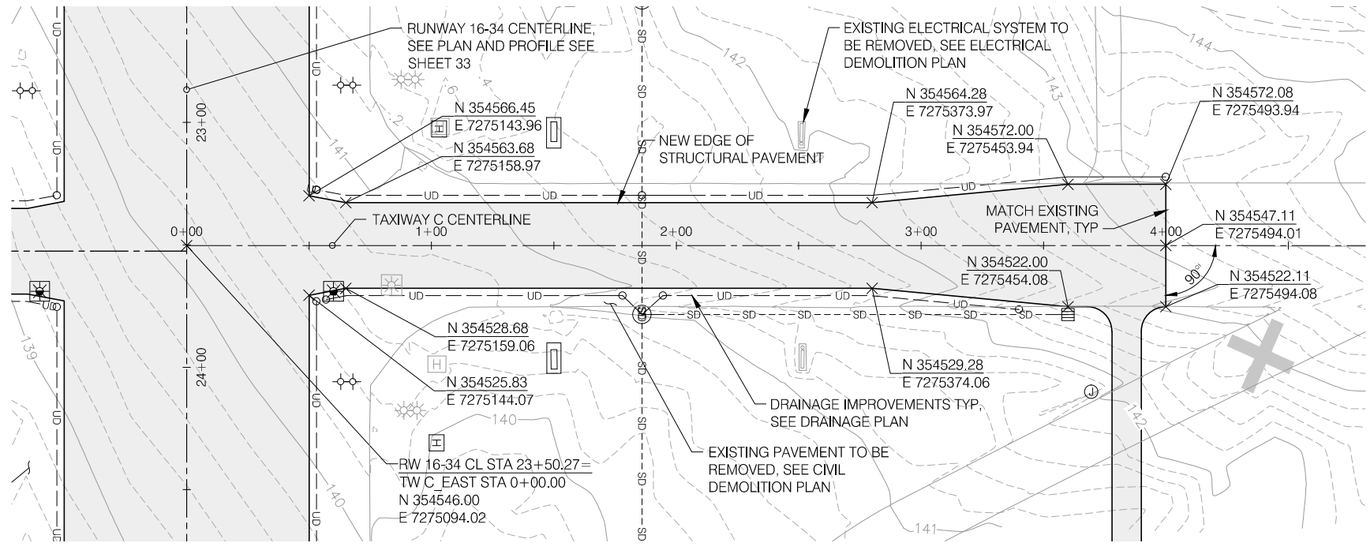


NORTH

0 15 30 60

SCALE IN FEET

## TAXIWAY C EAST PLAN

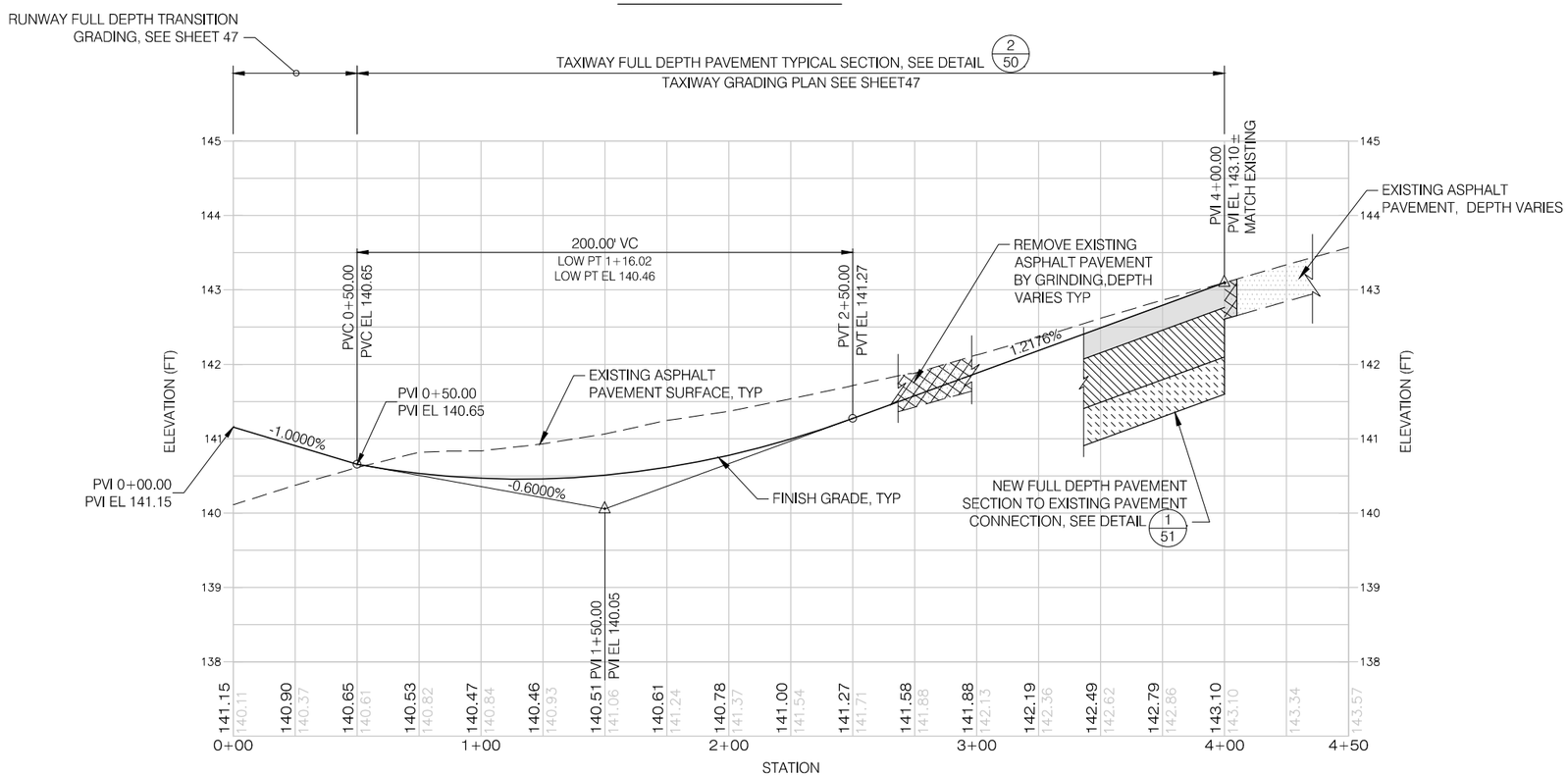


## TAXIWAY C EAST PROFILE


PRECISION APPROACH ENGINEERING
5125 Southwest Hout Street
Corvallis, OR 97333
541•754•0043


REGISTERED PROFESSIONAL ENGINEER
72693PE
OREGON
JUNE 14, 2007
GEOFF W. VAUGHN
EXPIRES 6/30/2014

REVISIONS: DATE APPD.

| | |
|---|---|
| DATE: | JUNE 2013 |
| DESIGN: | TLK |
| DRAWN: | JAW |
| CHECKED: | GWV |
| REVISION NUMBER: | 0 |

SCALE: AS SHOWN

NEWPORT MUNICIPAL AIRPORT
RUNWAY 16-34 REHABILITATION

# TAXIWAY C EAST PLAN AND PROFILE

PRECISION APPROACH ENGINEERING, INC.
AIP NO. 3-41-0040-021

PROJECT NUMBER: **NPT008**

SHEET NO. **39** OF **108**

06/11/13 - 9:30pm - jwade - P:\N\NPT008-RW 16-34 Rehab-Dsn\0400CAD\DWG\Sheets\NPT008-TW-PlanProfile.dwg

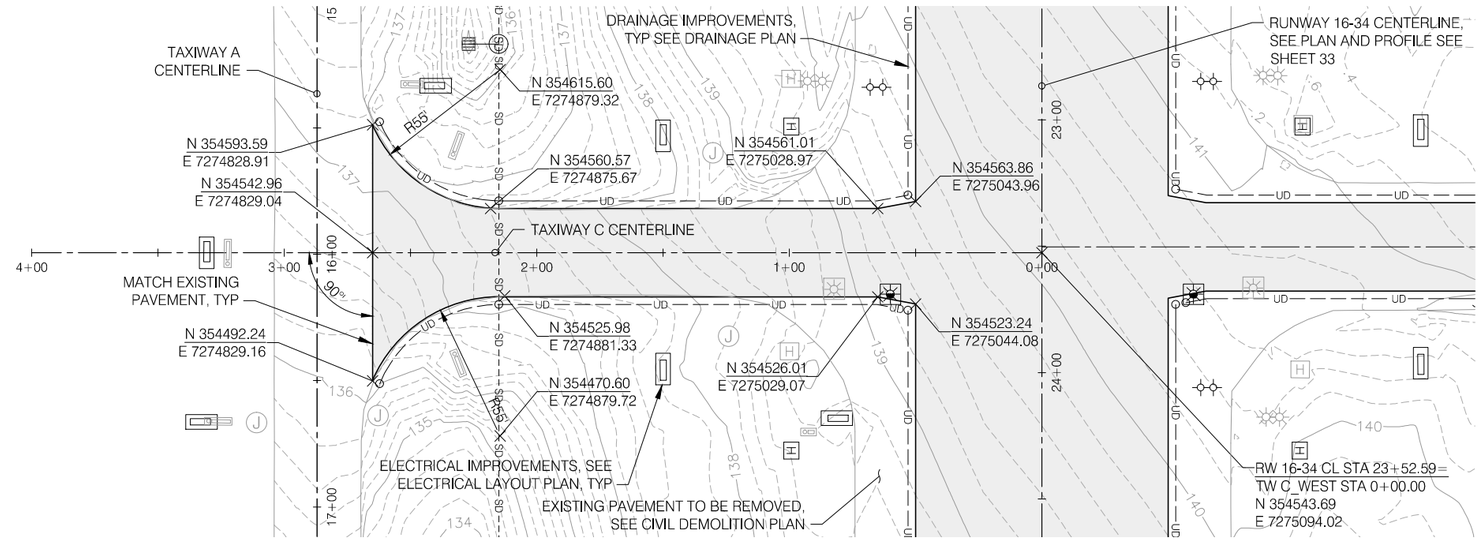


TAXIWAY C WEST PLAN

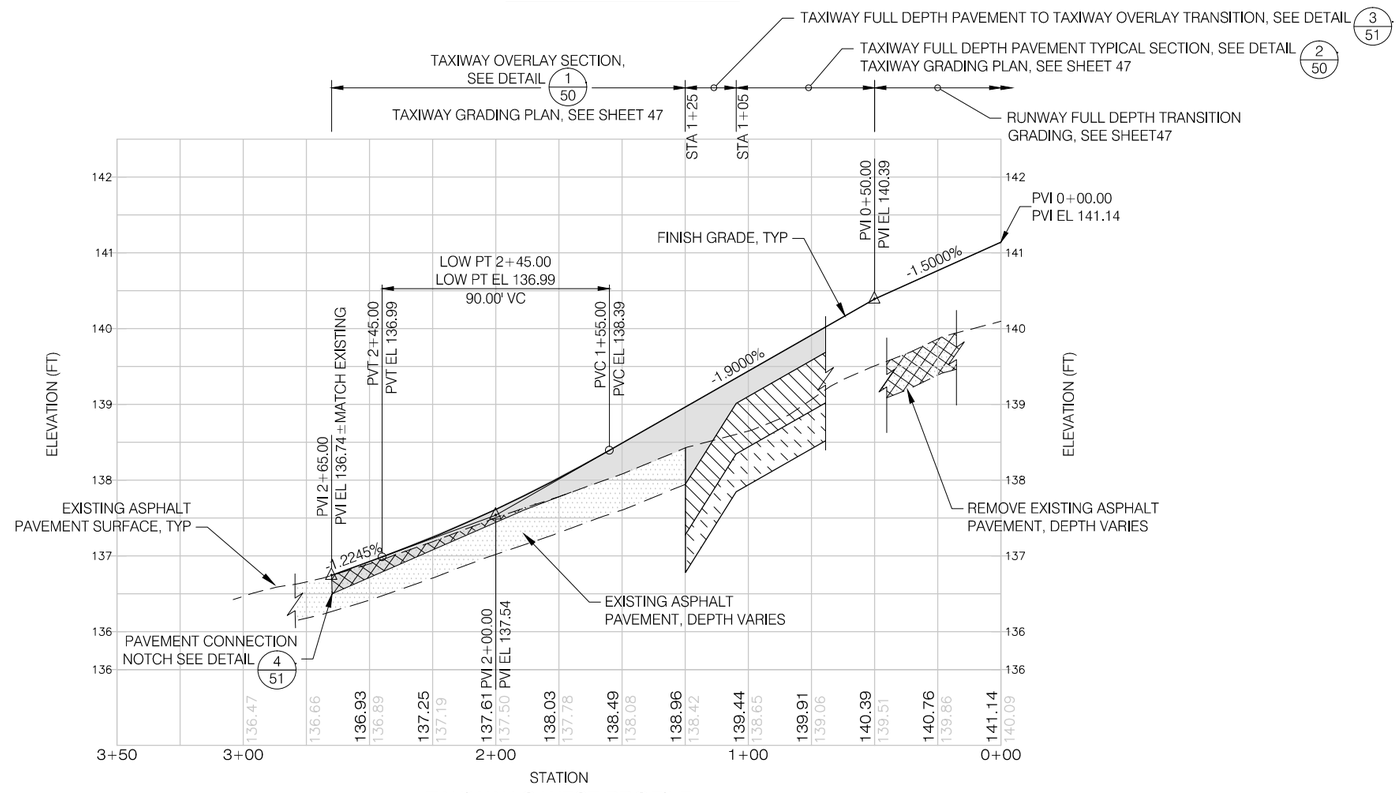


TAXIWAY C WEST PROFILE

PRECISION APPROACH ENGINEERING
5125 Southwest Hout Street
Corvallis, OR 97333
541•754•0043

REGISTERED PROFESSIONAL ENGINEER 72693PE OREGON JUNE 14, 2007 GEOFF W. VAUGHN EXPIRES 6/30/2014

REVISIONS: DATE APPD.

| | |
|---|---|
| DATE: | JUNE 2013 |
| DESIGN: | TLK |
| DRAWN: | JAW |
| CHECKED: | GWV |
| REVISION NUMBER: | 0 |
| SCALE: AS SHOWN | |

NEWPORT MUNICIPAL AIRPORT
RUNWAY 16-34 REHABILITATION

**TAXIWAY C WEST PLAN AND PROFILE**

PRECISION APPROACH ENGINEERING, INC.
AIP NO. 3-41-0040-021

PROJECT NUMBER: **NPT008**

SHEET NO. **40** OF **108**

06/11/13 - 9:30pm - jwade - P:\N\NPT008-RW 16-34 Rehab-Dsn\0400CAD\DWG\Sheets\NPT008-TW-PlanProfile.dwg

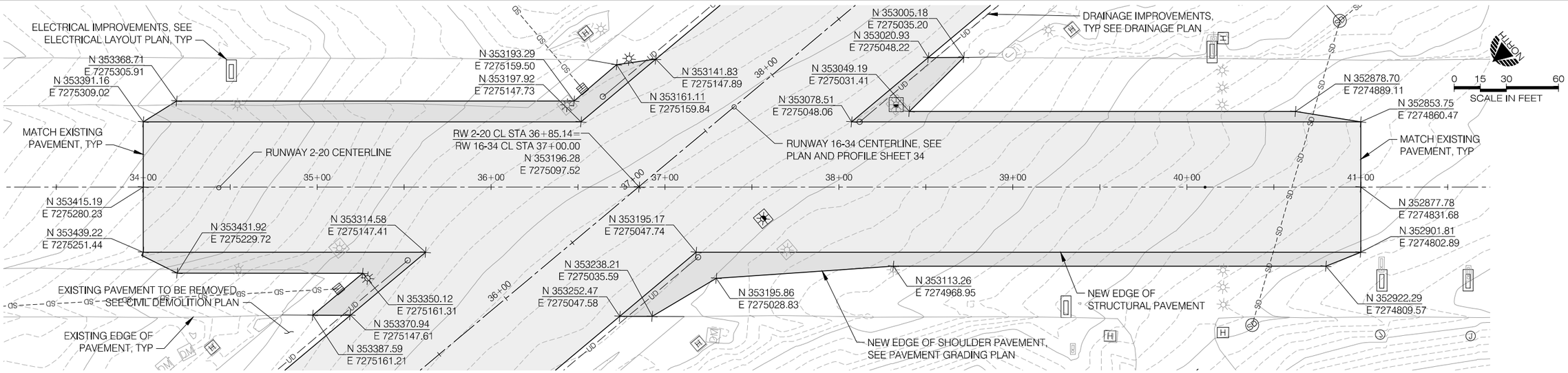


## RUNWAY 2-20 PLAN

RUNWAY 2-20 OVERLAY SECTION, SEE DETAIL 2/49

RUNWAY 2-20 GRADING PLAN, SEE SHEET 44

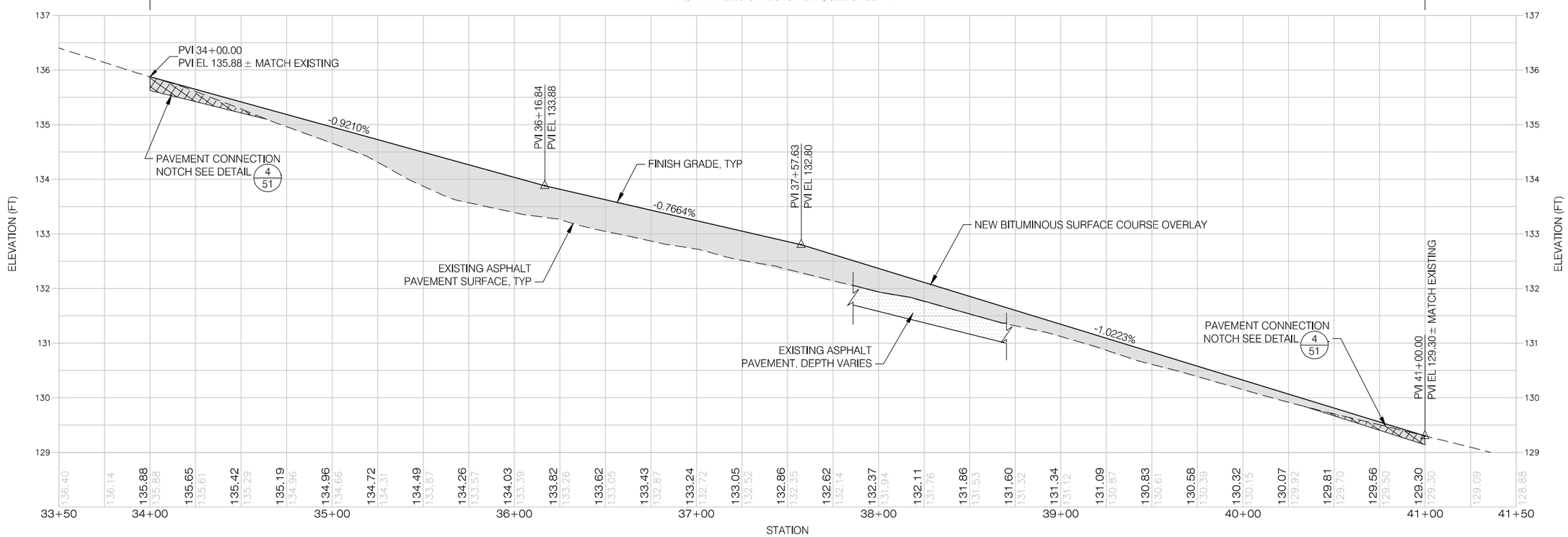


## RUNWAY 2-20 PROFILE


PRECISION APPROACH ENGINEERING
5125 Southwest Hout Street
Corvallis, OR 97333
541•754•0043


REGISTERED PROFESSIONAL ENGINEER 72693PE OREGON JUNE 14, 2007 GEOFF W. VAUGHN EXPIRES 6/30/2014

REVISIONS: DATE APPD.

| | |
|---|---|
| DATE: | JUNE 2013 |
| DESIGN: | TLK |
| DRAWN: | JAW |
| CHECKED: | GWV |
| REVISION NUMBER: | 0 |
| SCALE: AS SHOWN | |

NEWPORT MUNICIPAL AIRPORT
RUNWAY 16-34 REHABILITATION

# RUNWAY 2-20 PLAN AND PROFILE

PRECISION APPROACH ENGINEERING, INC.
AIP NO. 3-41-0040-021

PROJECT NUMBER: NPT008

SHEET NO. 41 OF 108

06/11/ 13 - 9:31pm - jwade - P:\N\NPT008-RW 16-34 Rehab-Dsn\0400CAD\DWG\Sheets\NPT008-TW-PlanProfile.dwg

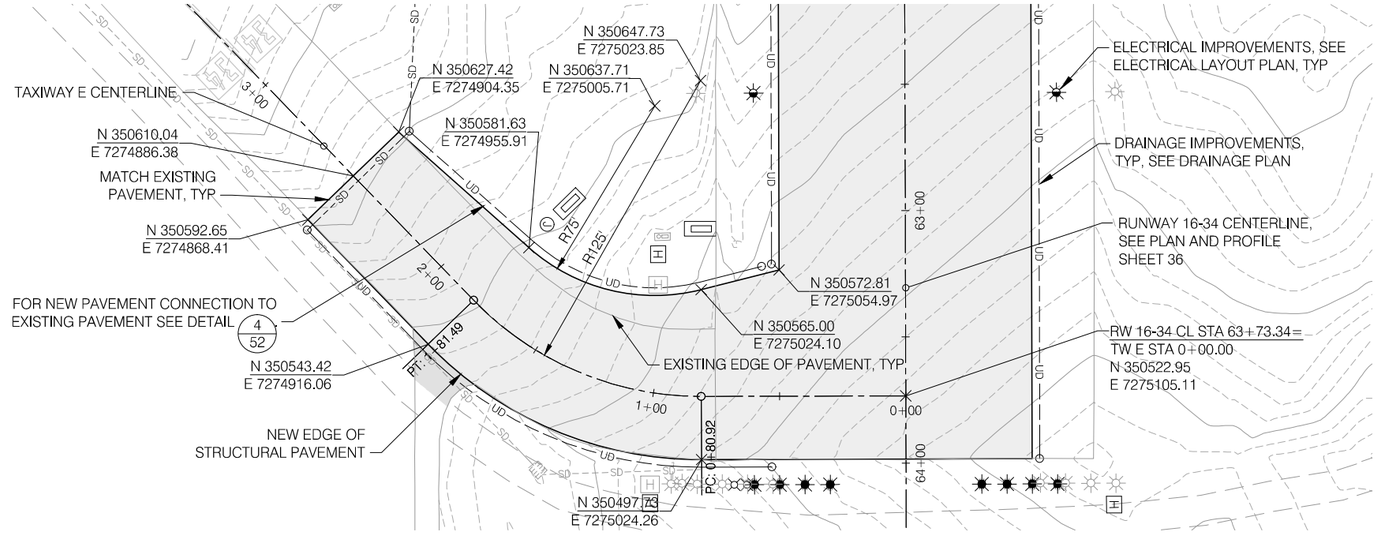


TAXIWAY E PLAN

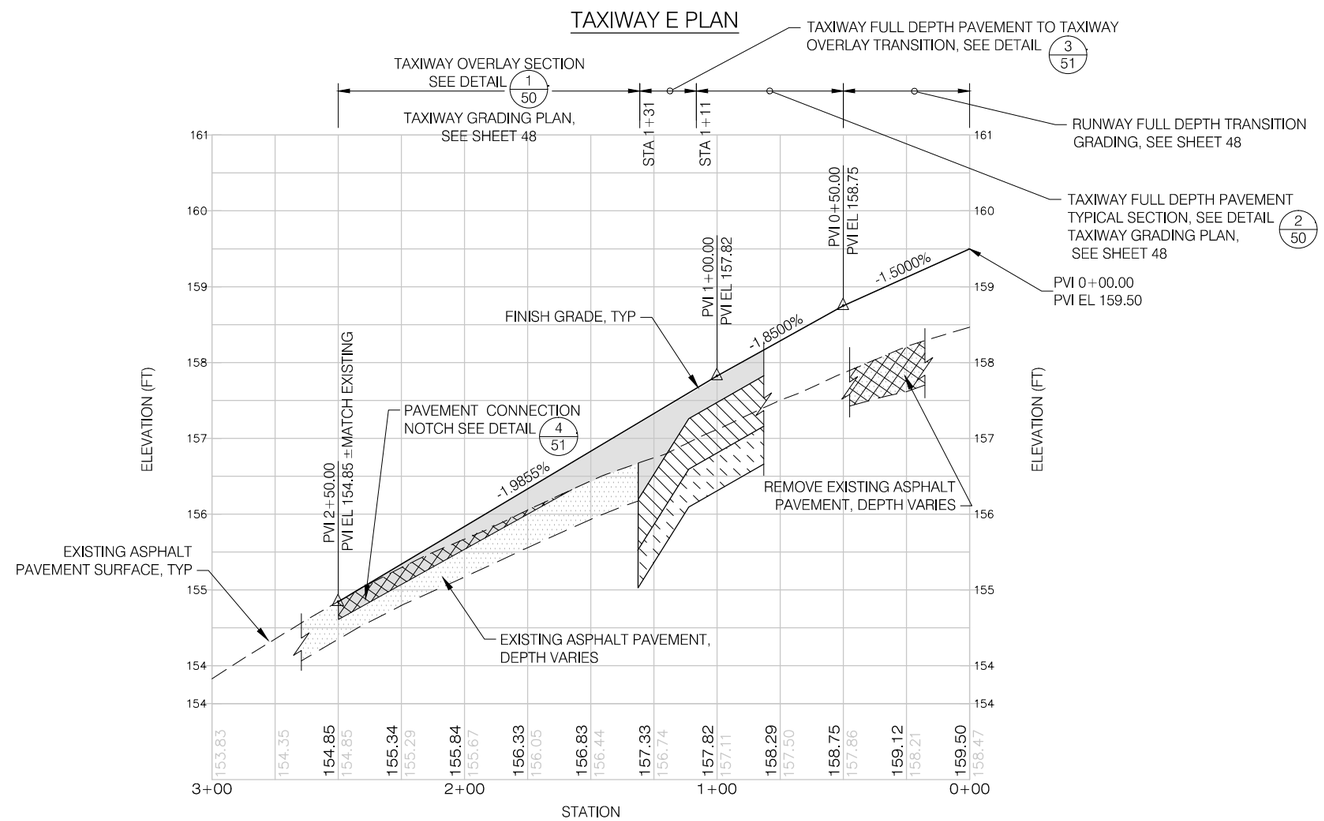


TAXIWAY E PROFILE

PRECISION APPROACH ENGINEERING
5125 Southwest Hout Street
Corvallis, OR 97333
541•754•0043

REGISTERED PROFESSIONAL ENGINEER
73893PE
OREGON
JUNE 14, 2007
GEOFF W. VAUGHN
EXPIRES 6/30/2014

REVISIONS: DATE APPD.

| | |
|---|---|
| DATE: | JUNE 2013 |
| DESIGN: | TLK |
| DRAWN: | JAW |
| CHECKED: | GWV |
| REVISION NUMBER: | 0 |
| SCALE: AS SHOWN | |

NEWPORT MUNICIPAL AIRPORT
RUNWAY 16-34 REHABILITATION

# TAXIWAY E PLAN AND PROFILE

PRECISION APPROACH ENGINEERING, INC.
AIP NO. 3-41-0040-021

PROJECT NUMBER: NPT008

SHEET NO. 42 OF 108

06/11/13 - 9:31pm - jwade - P:\N\NPT008-RW 16-34 Rehab-Dsn\0400CAD\DWG\Sheets\NPT008-TW-PlanProfile.dwg

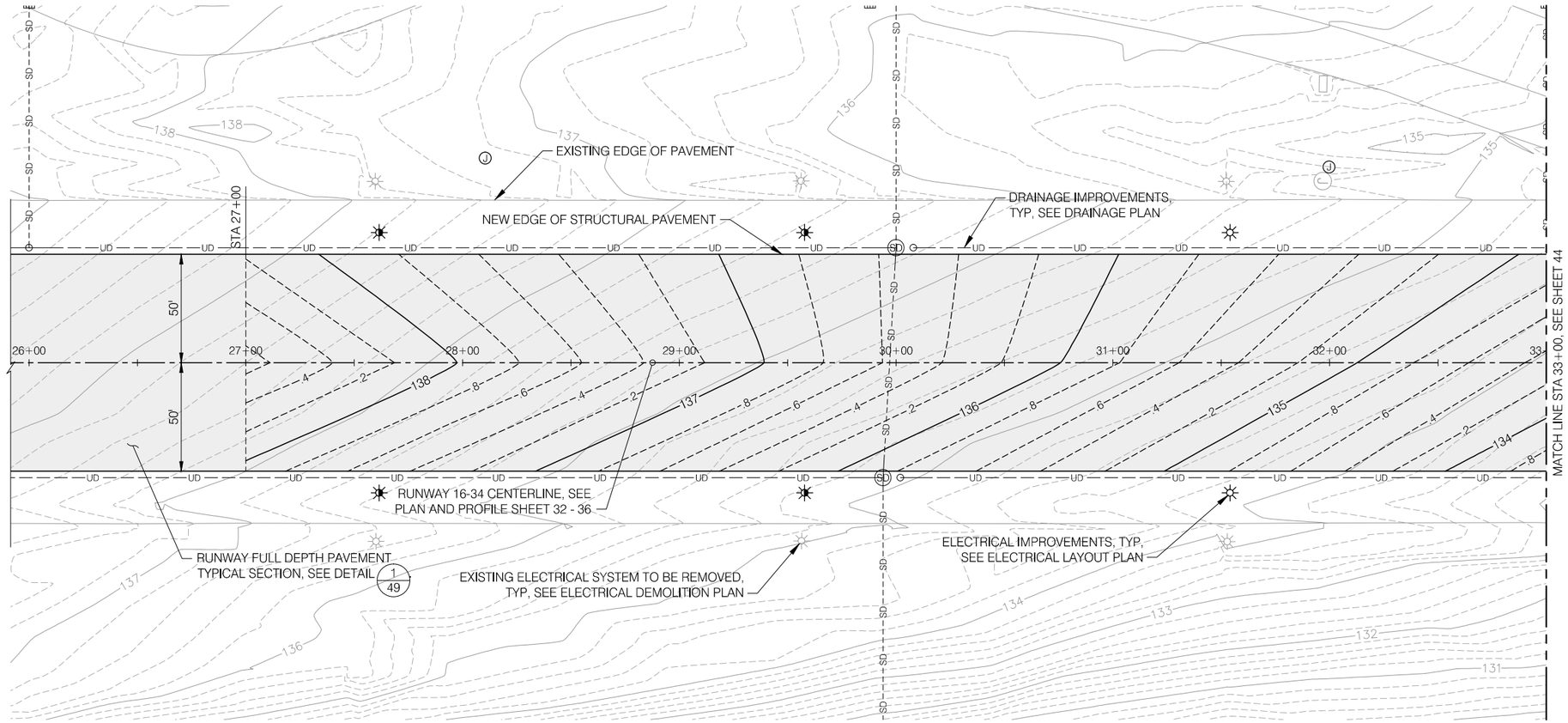


RUNWAY 16-34 PAVEMENT GRADING PLAN

06/11/ 13 - 9:31pm - jwade - P:\N\NPT008-RW 16-34 Rehab-Dsn\0400CAD\DWG\Sheets\NPT008-TW-Grading.dwg

PRECISION APPROACH ENGINEERING
5125 Southwest Hout Street
Corvallis, OR 97333
541•754•0043

REGISTERED PROFESSIONAL ENGINEER 72693PE OREGON JUNE 14, 2007 GEOFF W. VAUGHN
EXPIRES 6/30/2014

REVISIONS: DATE APPD.

DATE: JUNE 2013
DESIGN: TLK
DRAWN: JAW
CHECKED: GWV
REVISION NUMBER: 0

SCALE: AS SHOWN

NEWPORT MUNICIPAL AIRPORT
RUNWAY 16-34 REHABILITATION

**RUNWAY 16-34 PAVEMENT GRADING PLAN**

PRECISION APPROACH ENGINEERING, INC.
AIP NO. 3-41-0040-021

PROJECT NUMBER: **NPT008**

SHEET NO. **43** OF **108**

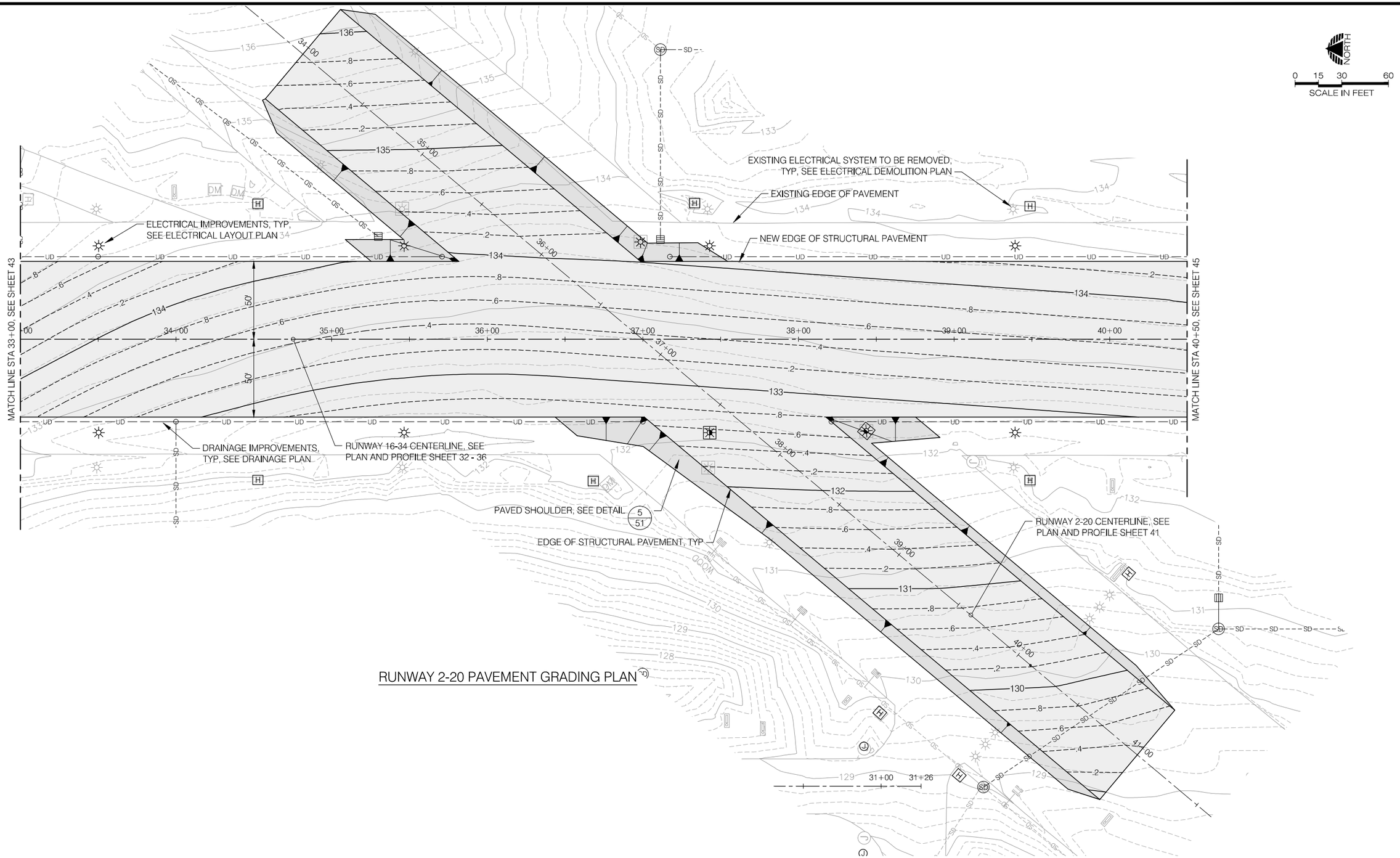


06/11/13 - 9:32pm - jwade - P:\N\NPT008-RW 16-34 Rehab-Dsn\0400CAD\DWG\Sheets\NPT008-TW-Grading.dwg

PRECISION APPROACH ENGINEERING
5125 Southwest Hout Street
Corvallis, OR 97333
541•754•0043

REGISTERED PROFESSIONAL ENGINEER
7269GPE
OREGON
JUNE 14, 2007
GEOFF W. VAUGHN
EXPIRES 6/30/2014

REVISIONS: DATE APPD.

| | |
|---|---|
| DATE: | JUNE 2013 |
| DESIGN: | TLK |
| DRAWN: | JAW |
| CHECKED: | GWV |
| REVISION NUMBER: | 0 |

SCALE: AS SHOWN

NEWPORT MUNICIPAL AIRPORT
RUNWAY 16-34 REHABILITATION

# RUNWAY 2-20 TRANSITION PAVEMENT GRADING PLAN

PRECISION APPROACH ENGINEERING, INC.
AIP NO. 3-41-0040-021

PROJECT NUMBER: NPT008

SHEET NO. 44 OF 108

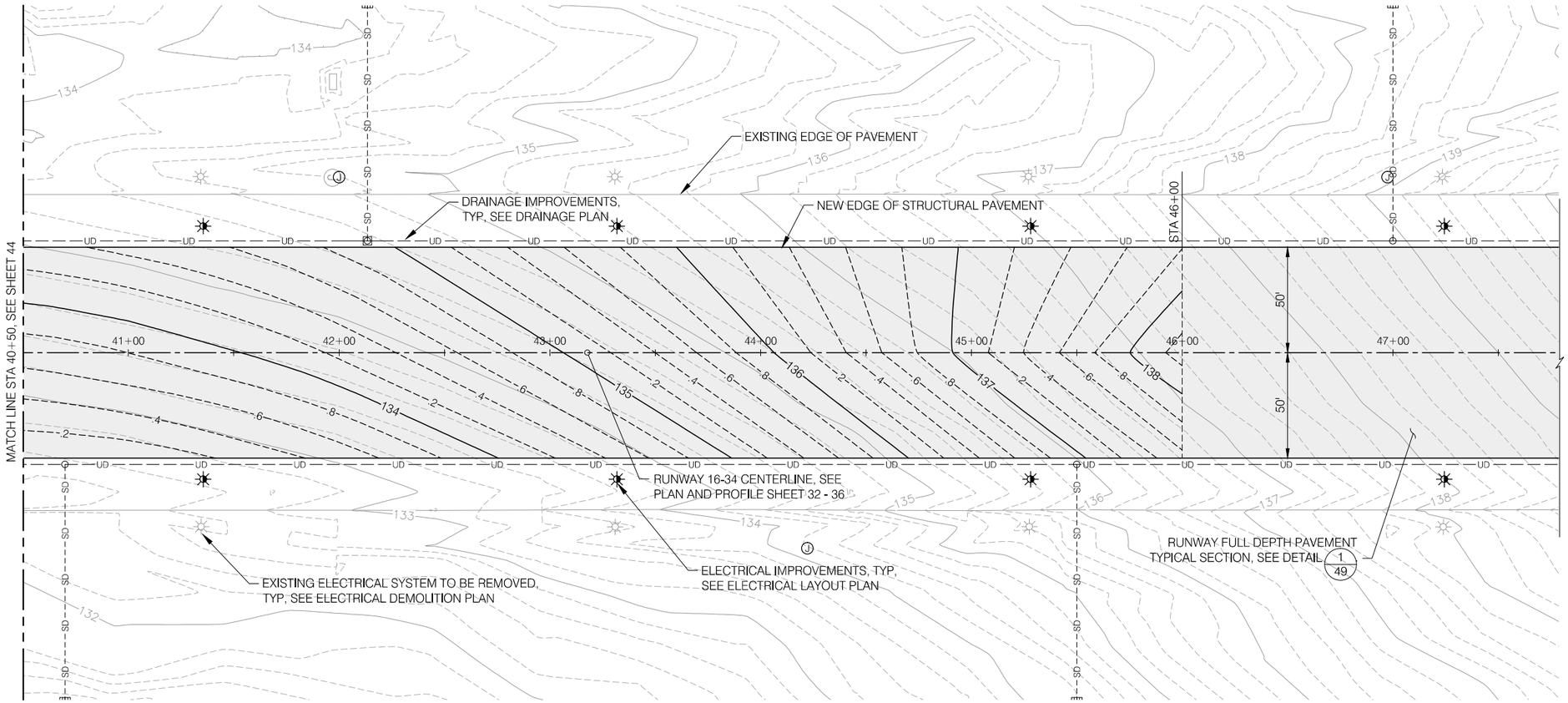


RUNWAY 16-34 PAVEMENT GRADING PLAN

06/11/ 13 - 9:32pm - jwade - P:\N\NPT008-RW 16-34 Rehab-Dsn\0400CAD\DWG\Sheets\NPT008-TW-Grading.dwg

PRECISION APPROACH ENGINEERING
5125 Southwest Hout Street
Corvallis, OR 97333
541•754•0043

REGISTERED PROFESSIONAL ENGINEER 72693PE OREGON JUNE 14, 2007 GEOFF W. VAUGHN
EXPIRES 6/30/2014

REVISIONS: DATE APPD.

| | |
|---|---|
| DATE: | JUNE 2013 |
| DESIGN: | TLK |
| DRAWN: | JAW |
| CHECKED: | GWV |
| REVISION NUMBER: | 0 |
| SCALE: AS SHOWN | |

NEWPORT MUNICIPAL AIRPORT
RUNWAY 16-34 REHABILITATION

**RUNWAY 16-34 PAVEMENT GRADING PLAN**

PRECISION APPROACH ENGINEERING, INC.
AIP NO. 3-41-0040-021

PROJECT NUMBER: **NPT008**

SHEET NO. **45** OF **108**

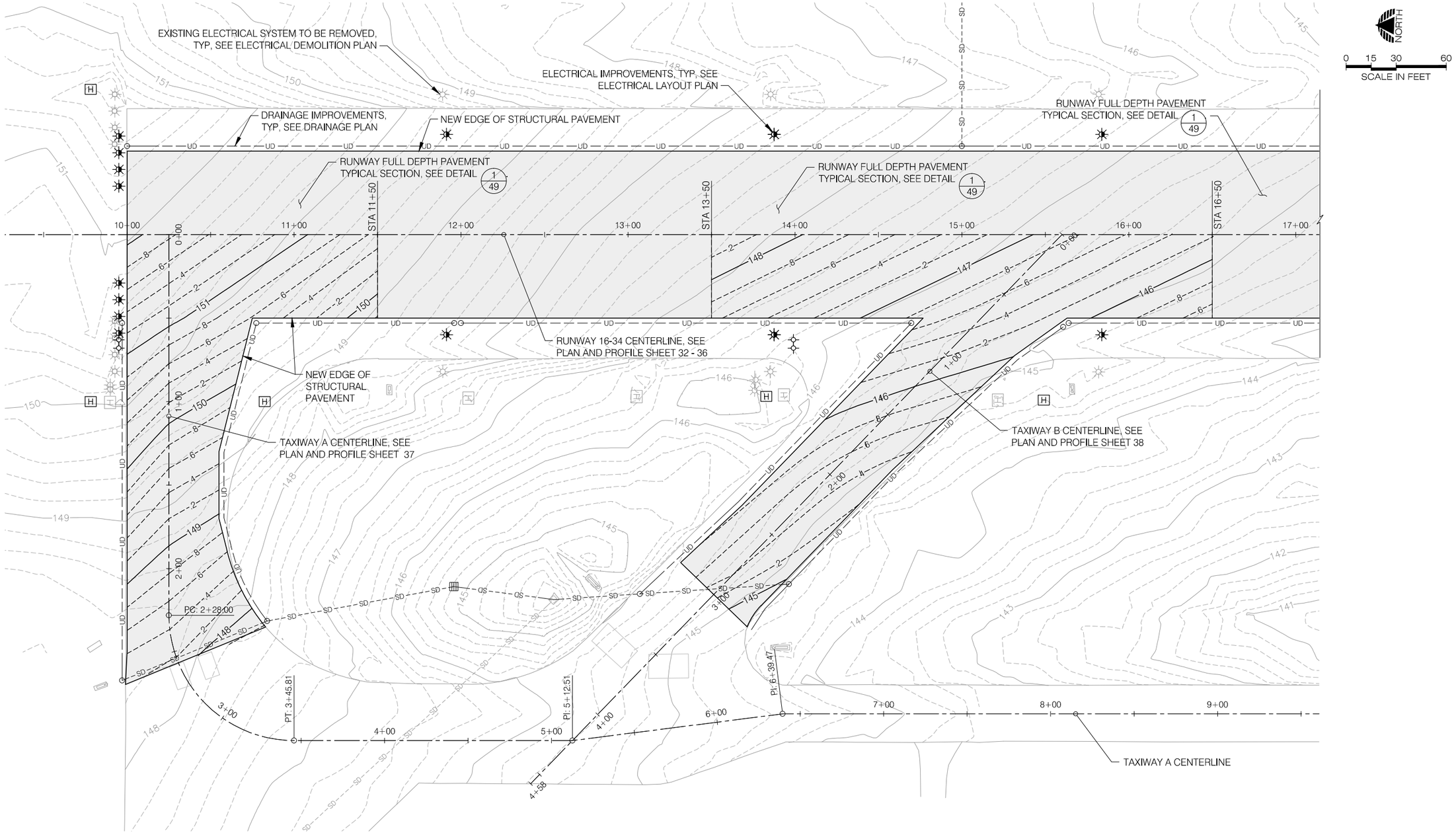


TAXIWAY A AND B PAVEMENT GRADING PLAN


PRECISION APPROACH ENGINEERING
5125 Southwest Hout Street
Corvallis, OR 97333
541•754•0043


REGISTERED PROFESSIONAL ENGINEER 72693PE OREGON JUNE 14, 2007 GEOFF W. VAUGHN
EXPIRES 6/30/2014

REVISIONS: DATE APPD.

| | |
|---|---|
| DATE: | JUNE 2013 |
| DESIGN: | TLK |
| DRAWN: | JAW |
| CHECKED: | GWV |
| REVISION NUMBER: | 0 |
| SCALE: AS SHOWN | |

NEWPORT MUNICIPAL AIRPORT
RUNWAY 16-34 REHABILITATION

# TAXIWAY A AND B PAVEMENT GRADING PLAN

PRECISION APPROACH ENGINEERING, INC.
AIP NO. 3-41-0040-021

PROJECT NUMBER: NPT008

SHEET NO. 46 OF 108

06/11/13 - 9:32pm - jwade - P:\N\NPT008-RW 16-34 Rehab-Dsn\0400CAD\DWG\Sheets\NPT008-TW-Grading.dwg

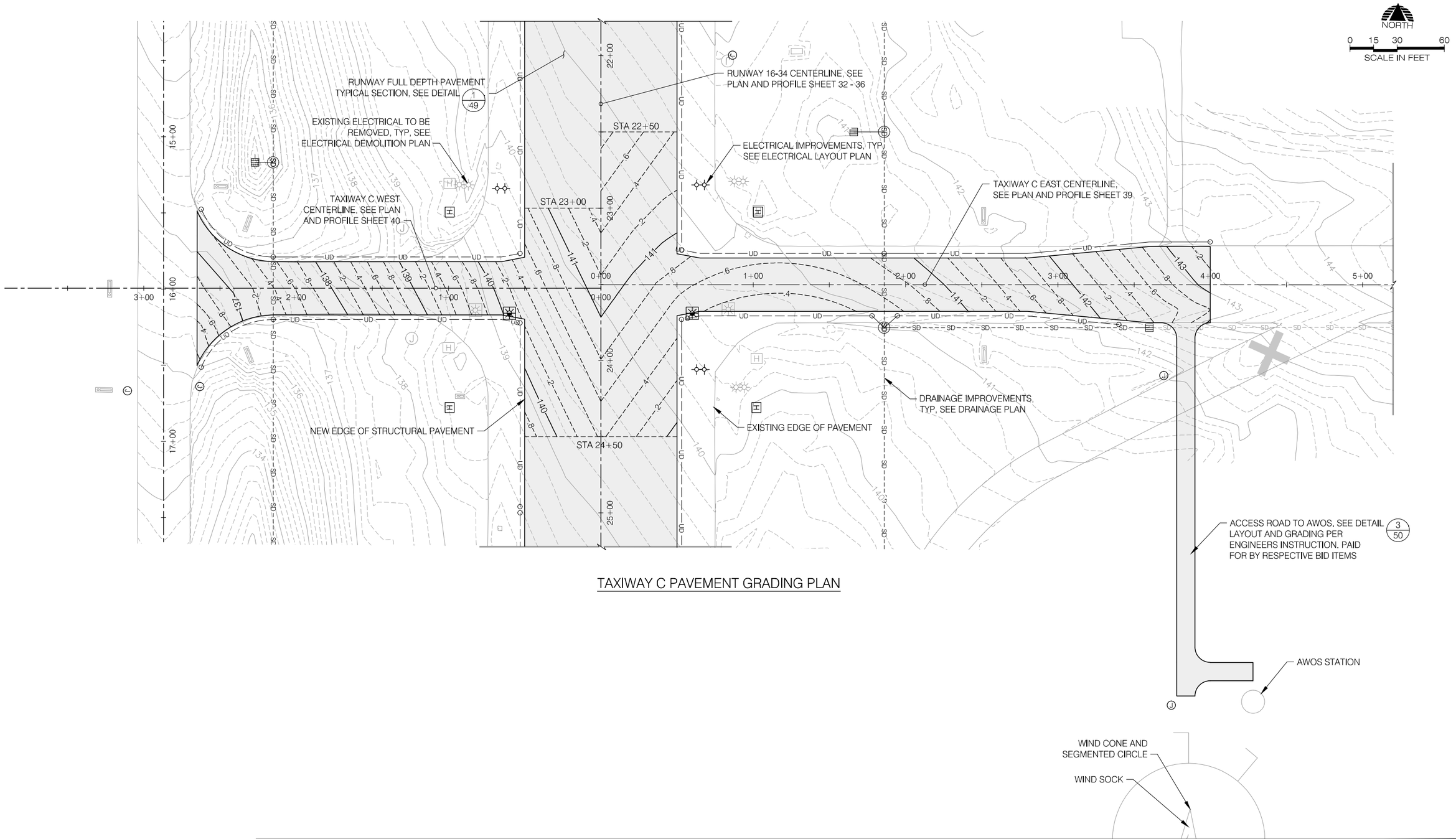


TAXIWAY C PAVEMENT GRADING PLAN

06/11/13 - 9:32pm - jwade - P:\N\NPT008-RW 16-34 Rehab-Dsn\0400CAD\DWG\Sheets\NPT008-TW-Grading.dwg

PRECISION APPROACH ENGINEERING
5125 Southwest Hout Street
Corvallis, OR 97333
541•754•0043

REGISTERED PROFESSIONAL ENGINEER 72693PE OREGON JUNE 14, 2007 GEOFF W. VAUGHN
EXPIRES 6/30/2014

REVISIONS: DATE APPD.

| | |
|---|---|
| DATE: | JUNE 2013 |
| DESIGN: | TLK |
| DRAWN: | JAW |
| CHECKED: | GWV |
| REVISION NUMBER: | 0 |
| SCALE: AS SHOWN | |

NEWPORT MUNICIPAL AIRPORT
RUNWAY 16-34 REHABILITATION

**TAXIWAY C PAVEMENT GRADING PLAN**

PRECISION APPROACH ENGINEERING, INC.
AIP NO. 3-41-0040-021

PROJECT NUMBER: **NPT008**

SHEET NO. **47** OF **108**

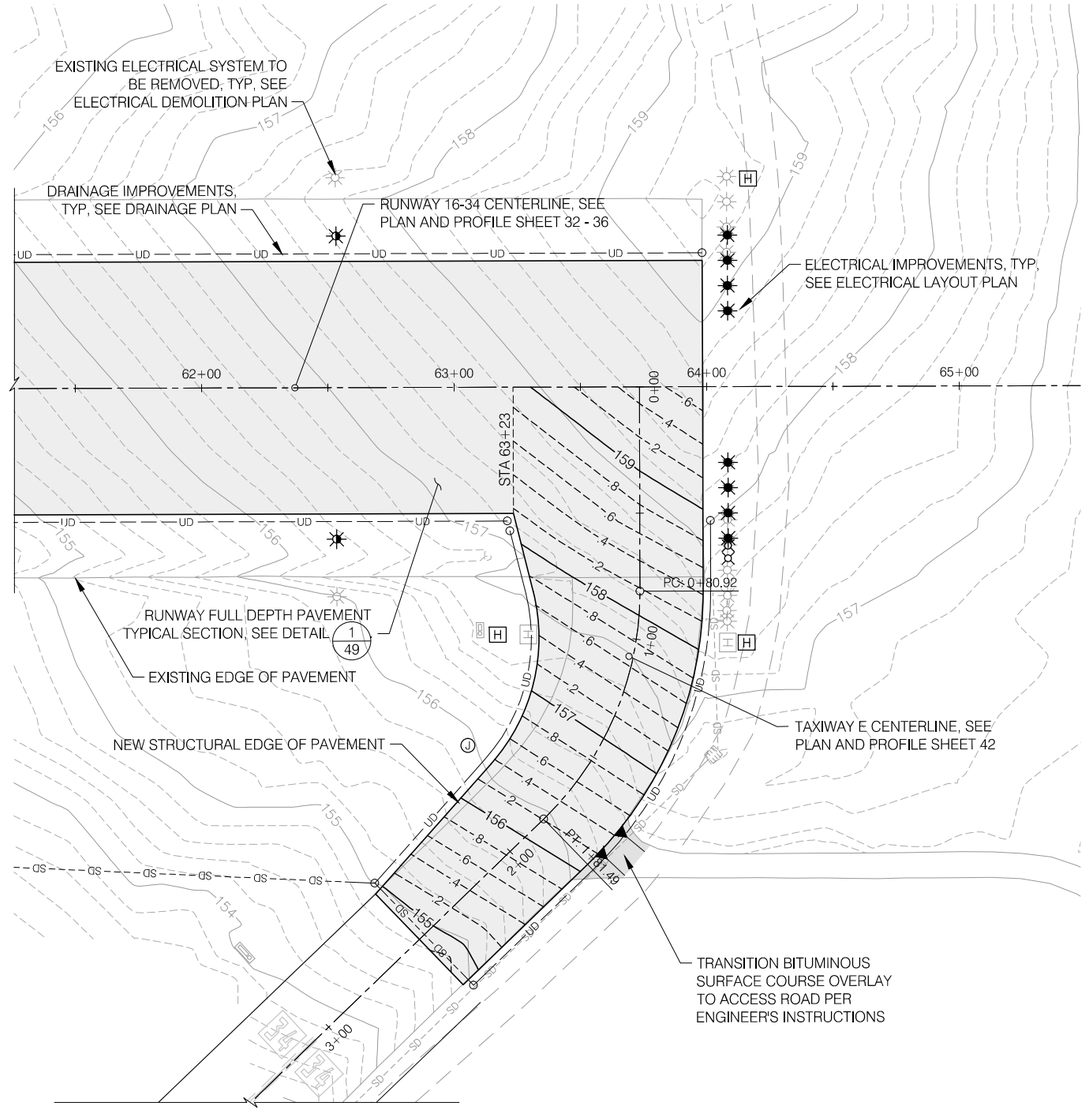


TAXIWAY E PAVEMENT GRADING PLAN

NORTH

0 15 30 60

SCALE IN FEET

06/11/13 - 9:33pm - jwade - P:\N\NPT008-RW 16-34 Rehab-Dsn\0400CAD\DWG\Sheets\NPT008-TW-Grading.dwg

PRECISION APPROACH ENGINEERING
5125 Southwest Hout Street
Corvallis, OR 97333
541•754•0043

REGISTERED PROFESSIONAL ENGINEER 72693PE OREGON JUNE 14, 2007 GEOFF W. VAUGHN EXPIRES 6/30/2014

REVISIONS: DATE APPD.

| | |
|---|---|
| DATE: | JUNE 2013 |
| DESIGN: | TLK |
| DRAWN: | JAW |
| CHECKED: | GWV |
| REVISION NUMBER: | 0 |
| SCALE: AS SHOWN | |

NEWPORT MUNICIPAL AIRPORT
RUNWAY 16-34 REHABILITATION

# TAXIWAY E PAVEMENT GRADING PLAN

PRECISION APPROACH ENGINEERING, INC.
AIP NO. 3-41-0040-021

PROJECT NUMBER: NPT008

SHEET NO. 48 OF 108

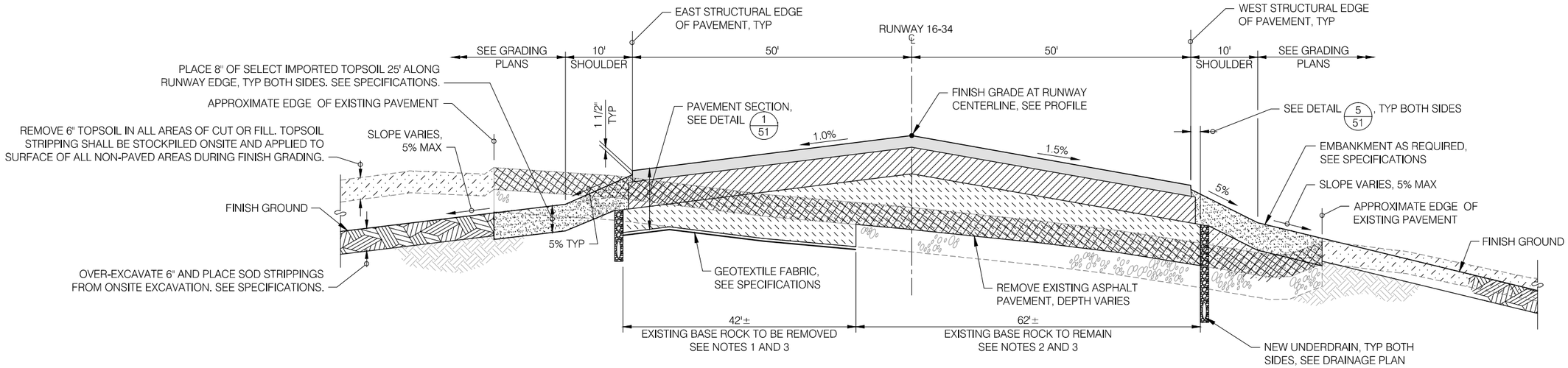


RUNWAY 16-34 FULL DEPTH PAVEMENT TYPICAL SECTION (1/49)

NTS

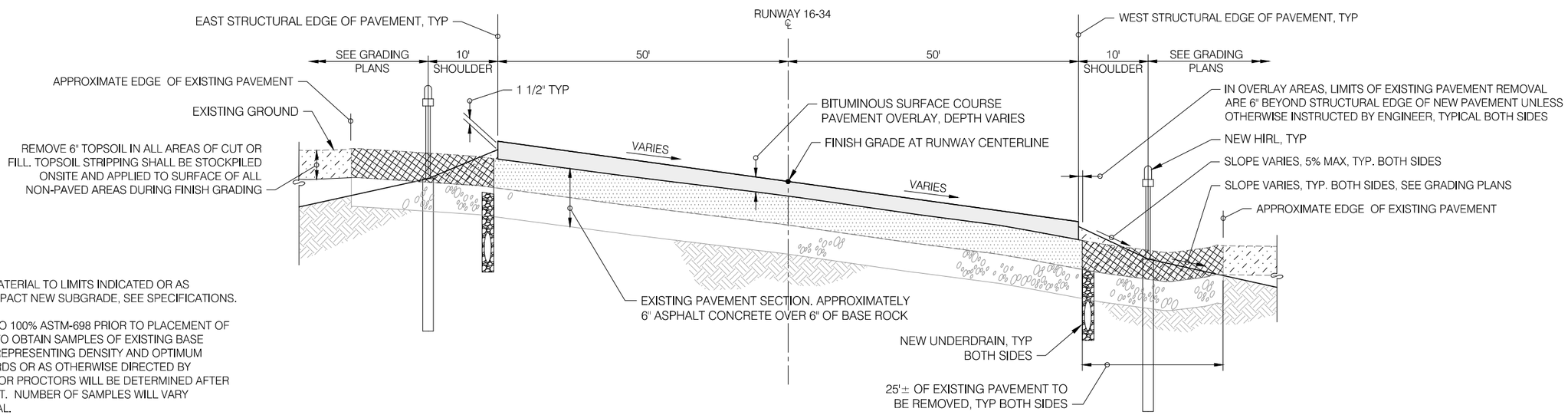


RUNWAY 16-34 OVERLAY PAVEMENT TYPICAL SECTION (2/49)

NTS

NOTES:

1. EXCAVATE EXISTING BASE AND UNDERLYING MATERIAL TO LIMITS INDICATED OR AS OTHERWISE DIRECTED BY THE ENGINEER. COMPACT NEW SUBGRADE, SEE SPECIFICATIONS.

2. COMPACT EXISTING BASE COURSE MATERIAL TO 100% ASTM-698 PRIOR TO PLACEMENT OF NEW P-154 SUBBASE COURSE. CONTRACTOR TO OBTAIN SAMPLES OF EXISTING BASE MATERIALS AND PROVIDE PROCTOR RESULTS REPRESENTING DENSITY AND OPTIMUM MOISTURE CONTENT PER ASTM D-698 STANDARDS OR AS OTHERWISE DIRECTED BY ENGINEER. MATERIAL SAMPLING LOCATIONS FOR PROCTORS WILL BE DETERMINED AFTER REMOVAL OF THE EXISTING ASPHALT PAVEMENT. NUMBER OF SAMPLES WILL VARY DEPENDING ON CONSISTENCY OF THE MATERIAL.

3. PROCESSING OF MATERIAL ENCOUNTERED IN ORDER TO OBTAIN REQUIRED COMPACTION SHALL BE CONSIDERED INCIDENTAL TO THE WORK. NO DIRECT PAYMENT WILL BE MADE FOR DEWATERING, AERATION, SCARIFICATION, OR OTHER PROCESSING NECESSARY TO OBTAIN ACCEPTABLE RESULTS.

PRECISION APPROACH ENGINEERING
5125 Southwest Hout Street
Corvallis, OR 97333
541•754•0043

REGISTERED PROFESSIONAL ENGINEER 72693PE OREGON JUNE 14, 2007 GEOFF W. VAUGHN EXPIRES 6/30/2014

REVISIONS: DATE APPD.

| | |
|---|---|
| DATE: | JUNE 2013 |
| DESIGN: | TLK |
| DRAWN: | JAW |
| CHECKED: | GWV |
| REVISION NUMBER: | 0 |
| SCALE: AS SHOWN | |

NEWPORT MUNICIPAL AIRPORT
RUNWAY 16-34 REHABILITATION

**TYPICAL SECTIONS**

PRECISION APPROACH ENGINEERING, INC.
AIP NO. 3-41-0040-021

PROJECT NUMBER: **NPT008**

SHEET NO. **49** OF **108**

06/11/13 - 9:33pm - jwade - P:\N\NPT008-RW 16-34 Rehab-Dsn\0400CAD\DWG\Sheets\NPT008-ACDE.DWG

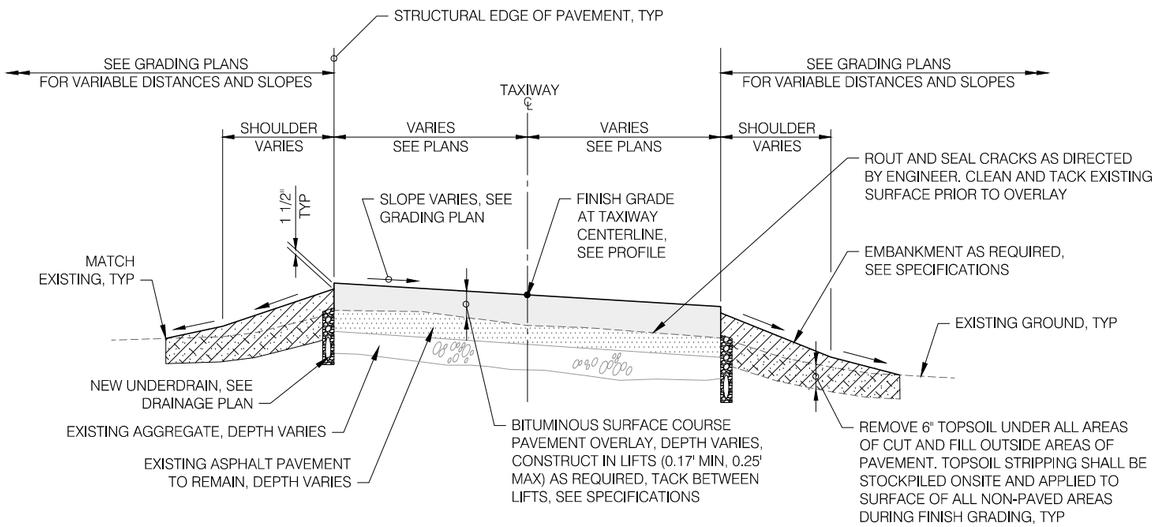


TAXIWAY OVERLAY
TYPICAL SECTION — 1/50
NTS

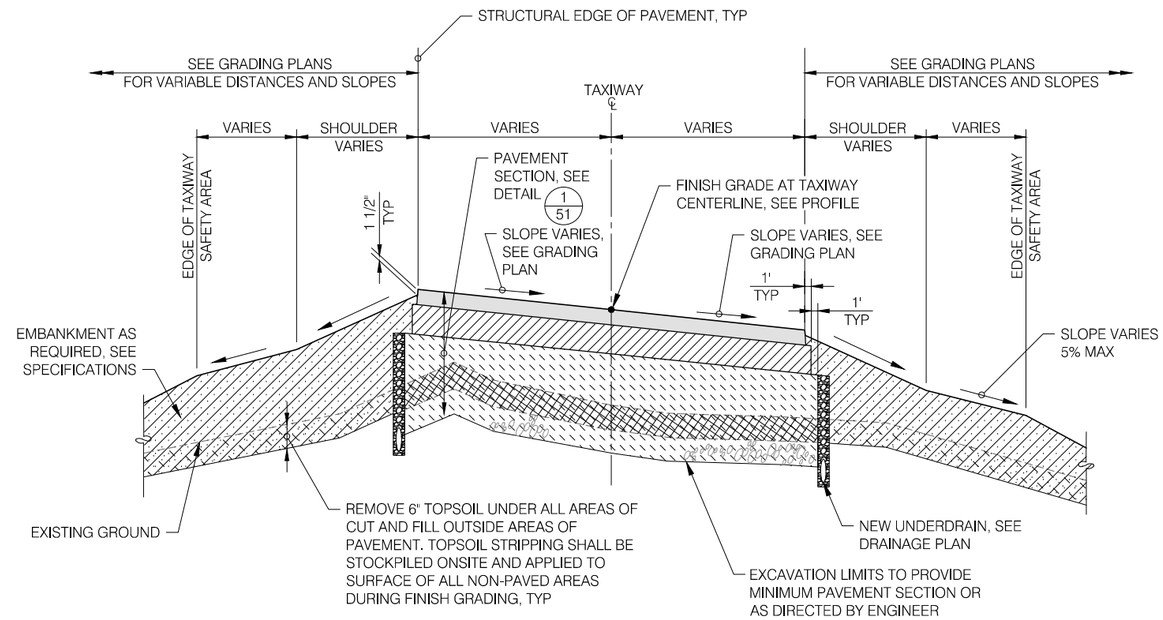


TAXIWAY FULL DEPTH PAVEMENT
TYPICAL SECTION — 2/50
NTS

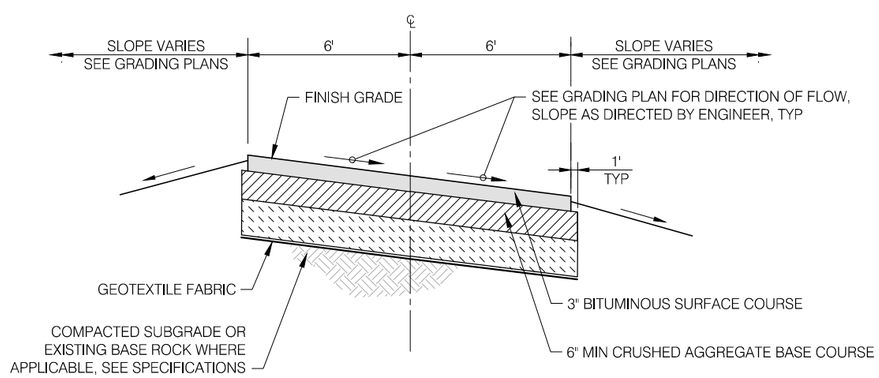


ACCESS ROADWAY
TYPICAL SECTION — 3/50
NTS

PRECISION APPROACH ENGINEERING
5125 Southwest Hout Street
Corvallis, OR 97333
541•754•0043

REGISTERED PROFESSIONAL ENGINEER 72693PE OREGON JUNE 14, 2007 GEOFF W. VAUGHN
EXPIRES 6/30/2014

REVISIONS: DATE APPD.

| | |
|---|---|
| DATE: | JUNE 2013 |
| DESIGN: | TLK |
| DRAWN: | JAW |
| CHECKED: | GWV |
| REVISION NUMBER: | 0 |
| SCALE: AS SHOWN | |

NEWPORT MUNICIPAL AIRPORT
RUNWAY 16-34 REHABILITATION

**TYPICAL SECTIONS**

PRECISION APPROACH ENGINEERING, INC.
AIP NO. 3-41-0040-021

PROJECT NUMBER: **NPT008**

SHEET NO. **50** OF **108**

06/11/ 13 - 9:33pm - jwade - P:\N\NPT008-RW 16-34 Rehab-Dsn\0400CAD\DWG\Sheets\NPT008-ACDE.DWG

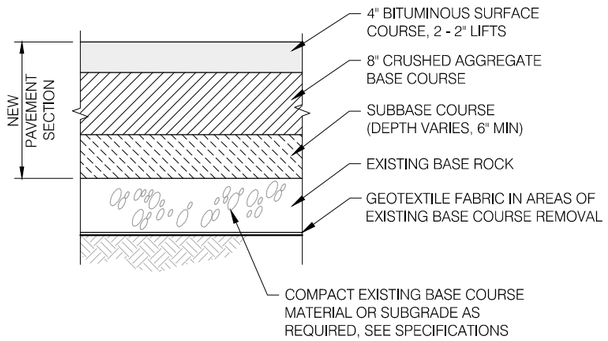


PAVEMENT SECTION DETAIL 1/51
NTS

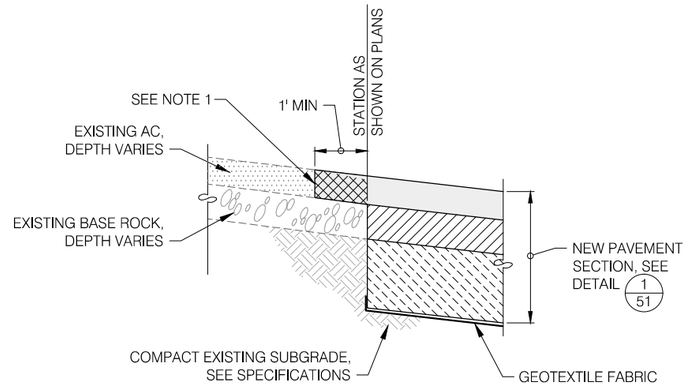


NOTES:
1. MAINTAIN VERTICAL SAWCUT EDGE. RECUT IF NECESSARY AT CONTRACTORS EXPENSE. CLEAN AND TACK PRIOR TO PAVING

FULL DEPTH TO EXISTING PAVEMENT CONNECTION DETAIL 2/51
NTS

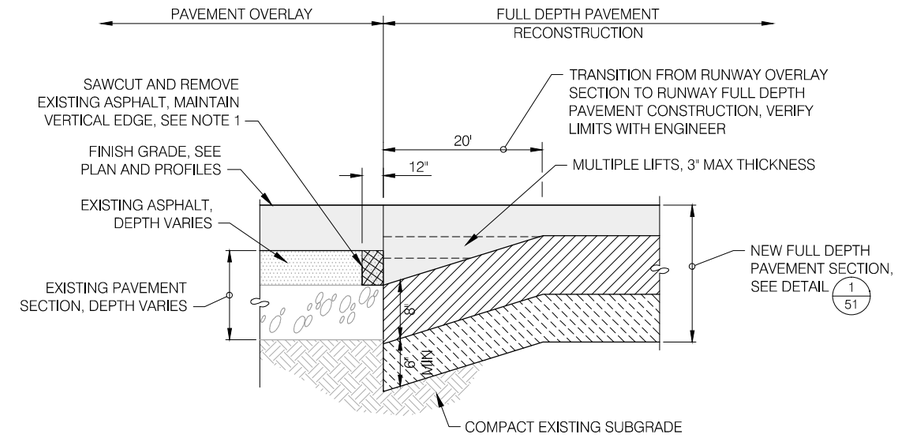


NOTES:
1. MAINTAIN VERTICAL SAWCUT EDGE. RECUT IF NECESSARY AT CONTRACTORS EXPENSE. CLEAN AND TACK PRIOR TO PAVING

OVERLAY TO FULL DEPTH PAVEMENT CONNECTION DETAIL 3/51
NTS

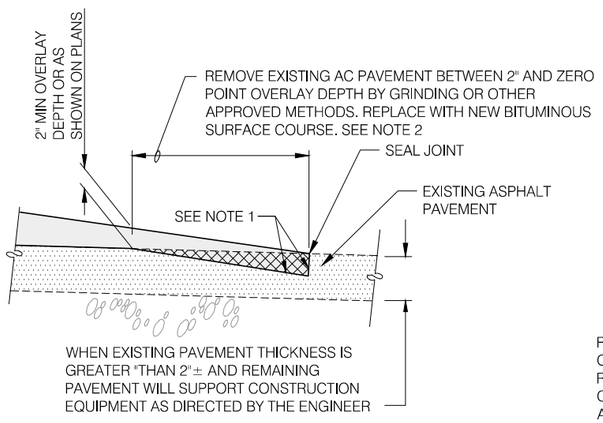


TRANSITION NOTCH WITH PARTIAL DEPTH ASPHALT PAVEMENT REMOVAL

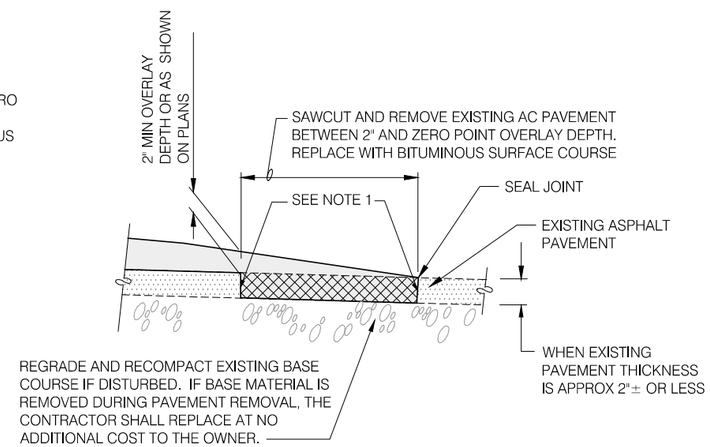


TRANSITION NOTCH WITH FULL DEPTH PAVEMENT REMOVAL

TRANSITION ZONE NOTCH DETAIL 4/51
NTS

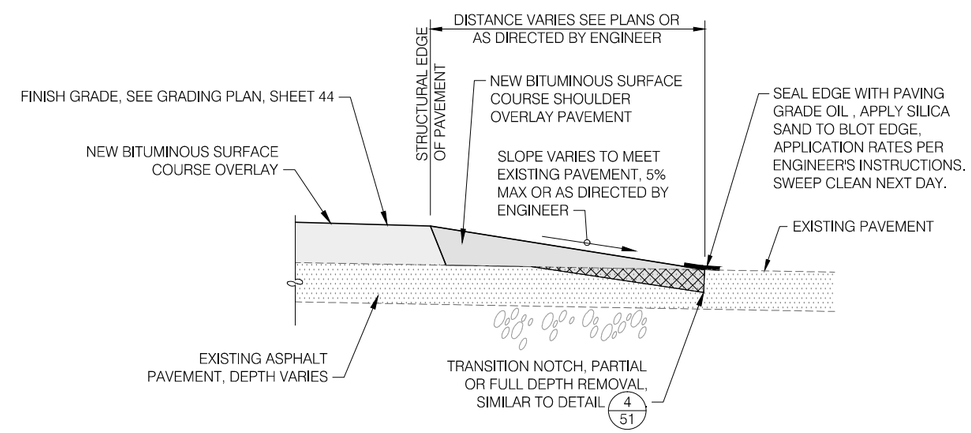


NOTES:
1. MAINTAIN VERTICAL SAWCUT EDGE. RECUT IF NECESSARY AT CONTRACTORS EXPENSE. CLEAN AND TACK COAT EDGE PRIOR TO PAVING

2. CONTRACTOR SHALL SURVEY 2" OVERLAY LINE AND LAYOUT ON PAVEMENT. VERIFY LIMITS WITH ENGINEER AFTER LAYOUT, PRIOR TO SAWCUTTING OR GRINDING.

PAVED SHOULDER DETAIL 5/51
NTS

PRECISION APPROACH ENGINEERING
5125 Southwest Hout Street
Corvallis, OR 97333
541•754•0043

REGISTERED PROFESSIONAL ENGINEER 72600PE OREGON JUNE 14, 2007 GEOFF W. VAUGHN EXPIRES 6/30/2014

REVISIONS: DATE APPD.

| | |
|---|---|
| DATE: | JUNE 2013 |
| DESIGN: | TLK |
| DRAWN: | JAW |
| CHECKED: | GWV |
| REVISION NUMBER: | 0 |
| SCALE: AS SHOWN | |

NEWPORT MUNICIPAL AIRPORT
RUNWAY 16-34 REHABILITATION

**PAVING DETAILS**

PRECISION APPROACH ENGINEERING, INC.
AIP NO. 3-41-0040-021

PROJECT NUMBER: **NPT008**

SHEET NO. **51** OF **108**

06/11/13 - 9:33pm - jwade - P:\N\NPT008-RW 16-34 Rehab-Dsn\0400CAD\DWG\Sheets\NPT008-ACDE.DWG

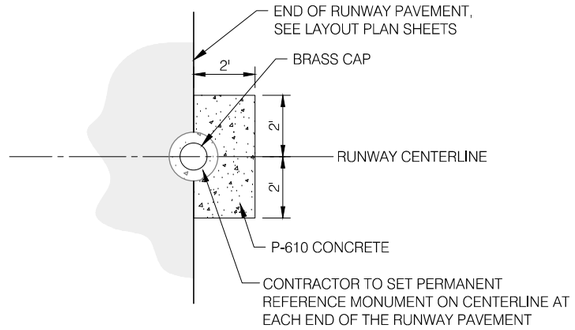


PLAN

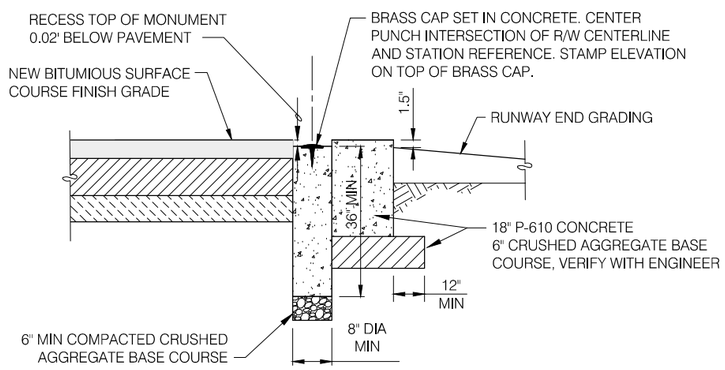


SECTION

NOTES:

1. PROVIDE ENGINEER WITH DOCUMENTATION OF COORDINATES AND ELEVATION OF PUNCHED CENTER POINT ON BRASS CAP. (TYPICAL OF TWO LOCATIONS)
2. PLACEMENT AND SURVEY OF NEW MONUMENT SHALL BE PREFORMED BY A PROFESSIONAL LAND SURVEYOR (PLS) REGISTERED IN THE STATE OF OREGON, THIS WORK CONSIDERED INCIDENTAL TO BITUMINOUS SURFACE COURSE BID ITEM AND SHALL INCLUDE ALL REQUIRED ELEMENTS OF WORK INCLUDING PAVEMENT CURING.

RUNWAY END MONUMENTATION DETAIL — 1/52
NTS

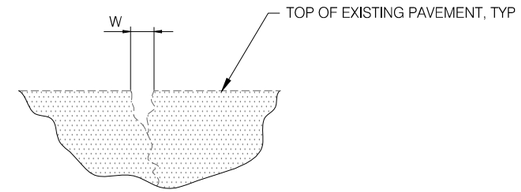


EXISTING CONDITION

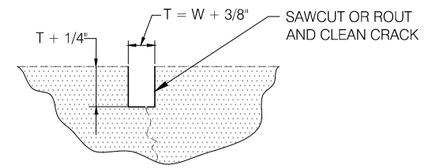


STEP 1

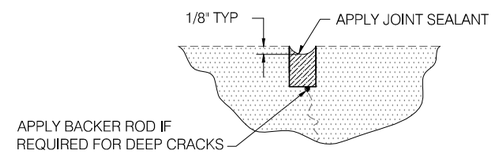


STEP 2

NOTES:

1. CRACKS TO BE SEALED WILL BE DETERMINED BY ENGINEER.
2. FRESHLY LAID SEALANT ABOVE SURFACE LEVEL SHALL BE REMOVED PRIOR TO OVERLAY. EXCESS SEALANT ADJACENT TO CRACK SHALL BE REMOVED BY GRINDING OR BY METHOD DEMONSTRATED TO REMOVE SEALANT WITHOUT SIGNIFICANT DISTRESS TO THE PAVEMENT.

PAVEMENT CRACK SEALING DETAIL — 2/52
NTS

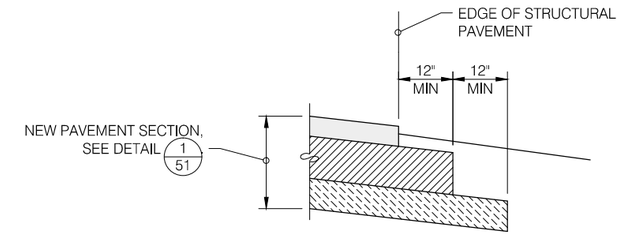


PAVEMENT EDGE DETAIL — 3/52
NTS

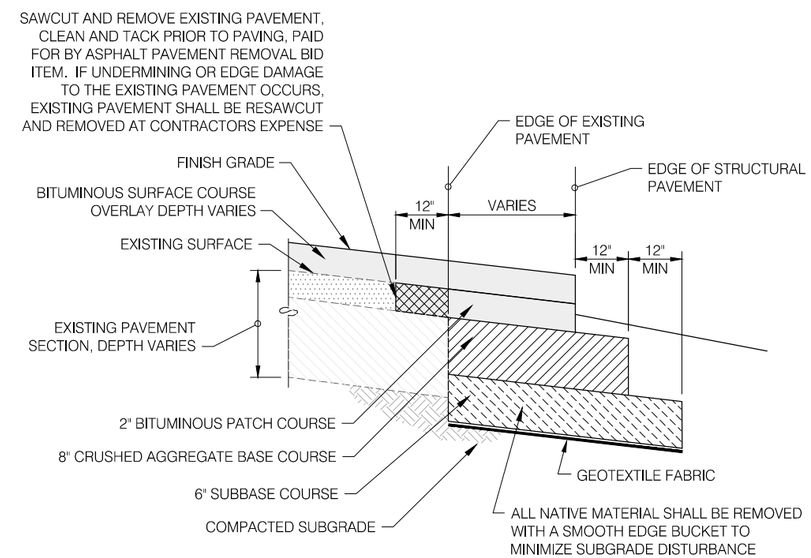


PAVEMENT WIDENING DETAIL — 4/52
NTS

PRECISION APPROACH ENGINEERING
5125 Southwest Hout Street
Corvallis, OR 97333
541•754•0043

REGISTERED PROFESSIONAL ENGINEER 72693PE OREGON JUNE 14, 2007 GEOFF W. VAUGHN EXPIRES 6/30/2014

REVISIONS: DATE APPD.

| | |
|---|---|
| DATE: | JUNE 2013 |
| DESIGN: | TLK |
| DRAWN: | JAW |
| CHECKED: | GWV |
| REVISION NUMBER: | 0 |
| SCALE: AS SHOWN | |

NEWPORT MUNICIPAL AIRPORT
RUNWAY 16-34 REHABILITATION

**PAVING DETAILS**

PRECISION APPROACH ENGINEERING, INC.
AIP NO. 3-41-0040-021

PROJECT NUMBER: **NPT008**

SHEET NO. **52** OF **108**

06/11/ 13 - 9:33pm - jwade - P:\N\NPT008-RW 16-34 Rehab-Dsn\0400CAD\DWG\Sheets\NPT008-ACDE.DWG

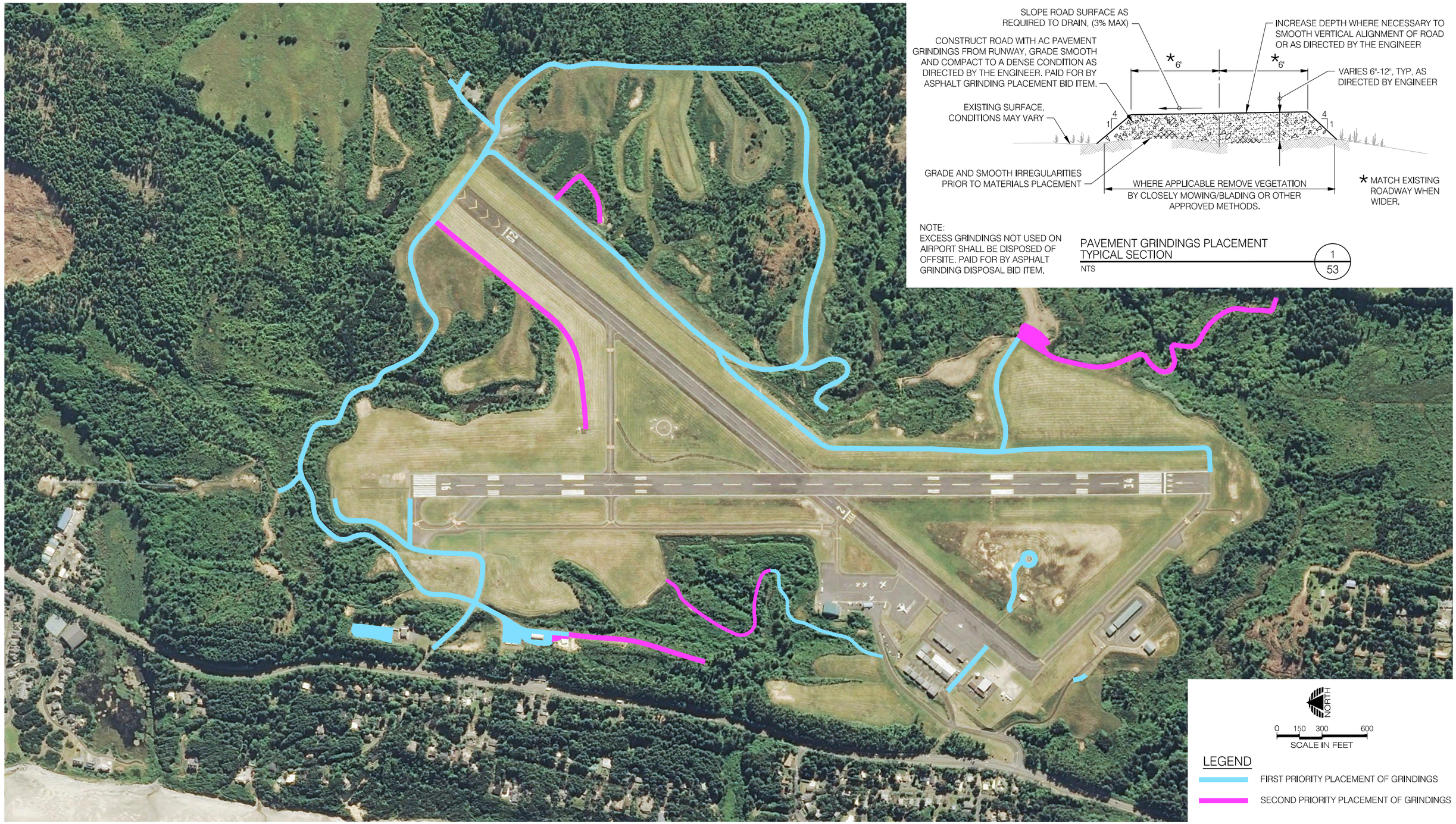





NOTE:
EXCESS GRINDINGS NOT USED ON AIRPORT SHALL BE DISPOSED OF OFFSITE. PAID FOR BY ASPHALT GRINDING DISPOSAL BID ITEM.

PAVEMENT GRINDINGS PLACEMENT TYPICAL SECTION

NTS

1 / 53

Reference: Google Earth Image,
Imagery date: 8/1/2011

NOTE:
THIS DRAWING IS INTENDED TO BE PRINTED IN COLOR. PRINTING IN BLACK AND WHITE MAY REDUCE READABILITY AND ALTER ENTITY DEFINITION OR REPRESENTATION.

PRECISION APPROACH ENGINEERING
5125 Southwest Hout Street
Corvallis, OR 97333
541•754•0043

REGISTERED PROFESSIONAL ENGINEER
26693PE
OREGON
JUNE 14, 2007
GEOFF W. VAUGHN
EXPIRES 6/30/2014

REVISIONS: DATE APPD.

| | |
|---|---|
| DATE: | JUNE 2013 |
| DESIGN: | TLK |
| DRAWN: | JAW |
| CHECKED: | GWV |
| REVISION NUMBER: | 0 |

SCALE: AS SHOWN

NEWPORT MUNICIPAL AIRPORT
RUNWAY 16-34 REHABILITATION

# PAVEMENT GRINDING PLACEMENT PLAN

PRECISION APPROACH ENGINEERING, INC.
AIP NO. 3-41-0040-021

PROJECT NUMBER: NPT008

SHEET NO. 53 OF 108

06/11/13 - 9:33pm - jwade - P:\N\NPT008-RW 16-34 Rehab-Dsn\0400CAD\DWG\Sheets\NPT008-Grinding-Placement.dwg

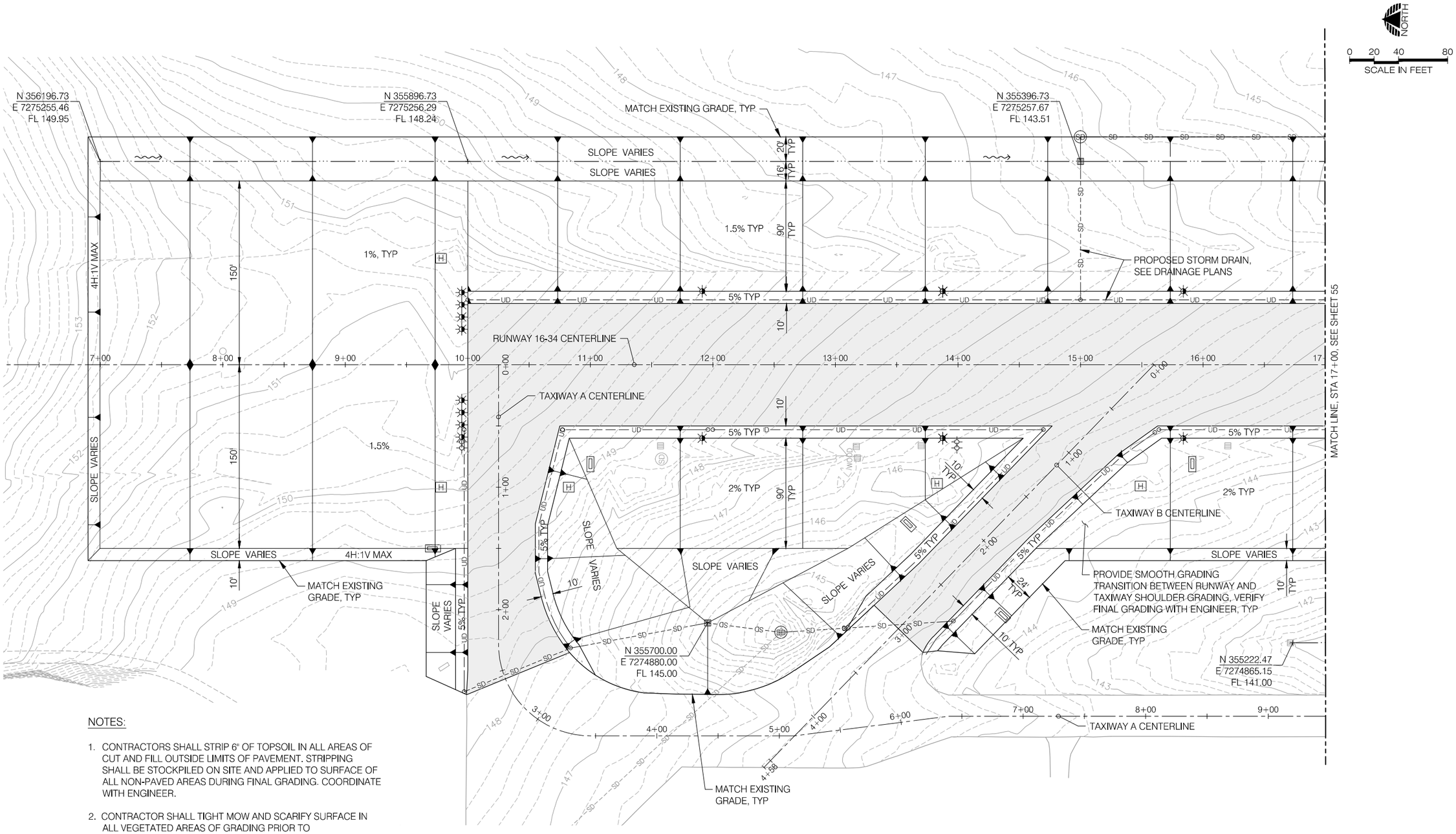


NOTES:

1. CONTRACTORS SHALL STRIP 6" OF TOPSOIL IN ALL AREAS OF CUT AND FILL OUTSIDE LIMITS OF PAVEMENT. STRIPPING SHALL BE STOCKPILED ON SITE AND APPLIED TO SURFACE OF ALL NON-PAVED AREAS DURING FINAL GRADING. COORDINATE WITH ENGINEER.

2. CONTRACTOR SHALL TIGHT MOW AND SCARIFY SURFACE IN ALL VEGETATED AREAS OF GRADING PRIOR TO CONSTRUCTION


PRECISION APPROACH ENGINEERING
5125 Southwest Hout Street
Corvallis, OR 97333
541•754•0043


REGISTERED PROFESSIONAL ENGINEER 72693PE OREGON JUNE 14, 2007 GEOFF W. VAUGHN EXPIRES 6/30/2014

REVISIONS: DATE APPD.

| | |
|---|---|
| DATE: | JUNE 2013 |
| DESIGN: | TLK |
| DRAWN: | JAW |
| CHECKED: | GWV |
| REVISION NUMBER: | 0 |
| SCALE: AS SHOWN | |

NEWPORT MUNICIPAL AIRPORT
RUNWAY 16-34 REHABILITATION

# GRADING PLAN STA 7+00 TO 17+00

PRECISION APPROACH ENGINEERING, INC.
AIP NO. 3-41-0040-021

PROJECT NUMBER: NPT008

SHEET NO. 54 OF 108

06/11/13 - 9:34pm - jwade - P:\N\NPT008-RW 16-34 Rehab-Dsn\0400CAD\DWG\Sheets\NPT008-Grading-SD.dwg

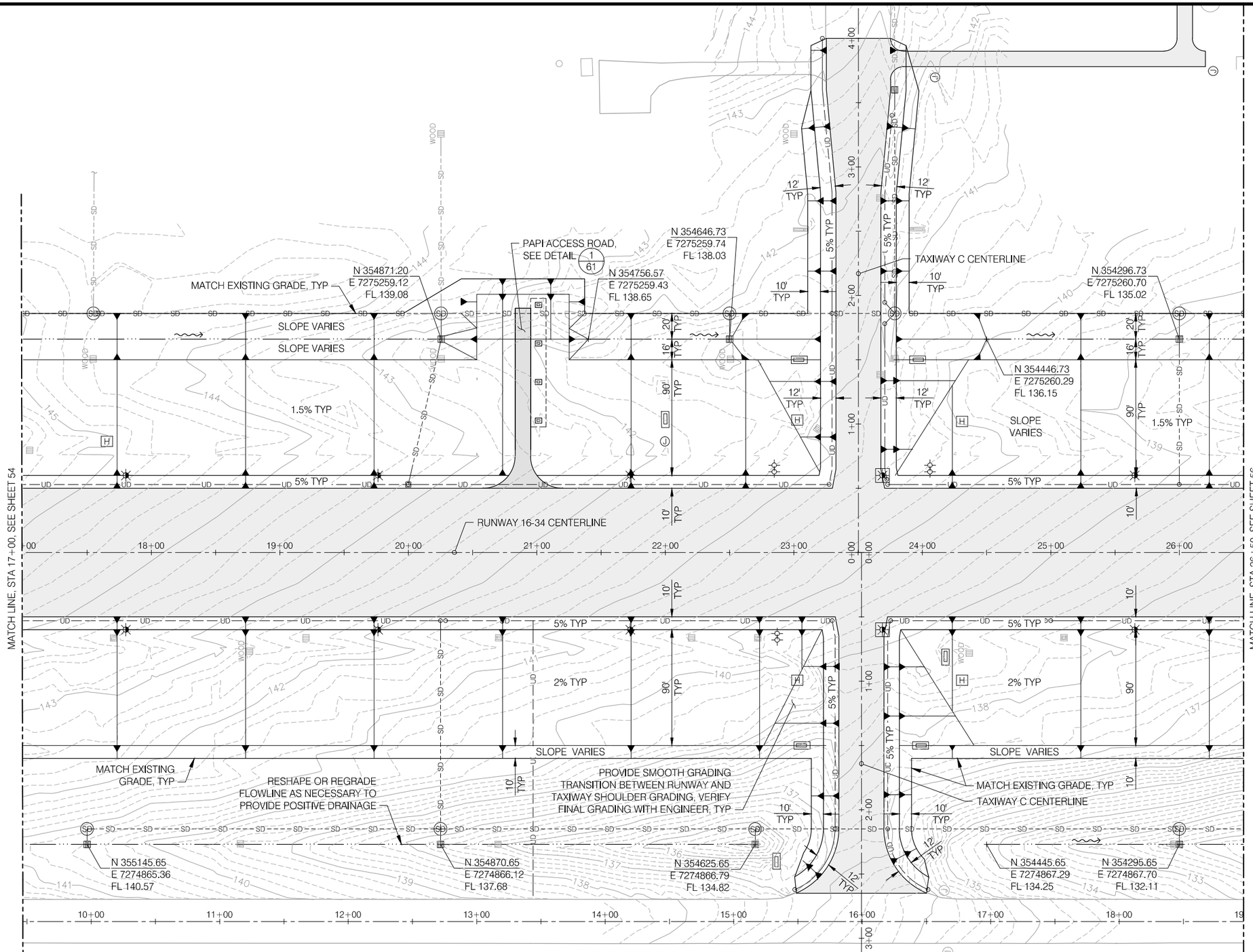


NOTES:

1. CONTRACTORS SHALL STRIP 6" OF TOPSOIL IN ALL AREAS OF CUT AND FILL OUTSIDE LIMITS OF PAVEMENT. STRIPPING SHALL BE STOCKPILED ON SITE AND APPLIED TO SURFACE OF ALL NON-PAVED AREAS DURING FINAL GRADING. COORDINATE WITH ENGINEER.
2. CONTRACTOR SHALL TIGHT MOW AND SCARIFY SURFACE IN ALL VEGETATED AREAS OF GRADING PRIOR TO CONSTRUCTION

PRECISION APPROACH ENGINEERING
5125 Southwest Hout Street
Corvallis, OR 97333
541•754•0043

REGISTERED PROFESSIONAL ENGINEER 72693PE OREGON JUNE 14, 2007 GEOFF W. VAUGHN EXPIRES 6/30/2014

REVISIONS: DATE APPD.

| | |
|---|---|
| DATE: | JUNE 2013 |
| DESIGN: | TLK |
| DRAWN: | JAW |
| CHECKED: | GWV |
| REVISION NUMBER: | 0 |
| SCALE: AS SHOWN | |

NEWPORT MUNICIPAL AIRPORT
RUNWAY 16-34 REHABILITATION

# GRADING PLAN STA 17+00 TO 26+50

PRECISION APPROACH ENGINEERING, INC.
AIP NO. 3-41-0040-021

PROJECT NUMBER: NPT008

SHEET NO. 55 OF 108

06/11/13 - 9:34pm - jwade - P:\N\NPT008-RW 16-34 Rehab-Dsn\0400CAD\DWG\Sheets\NPT008-Grading-SD.dwg

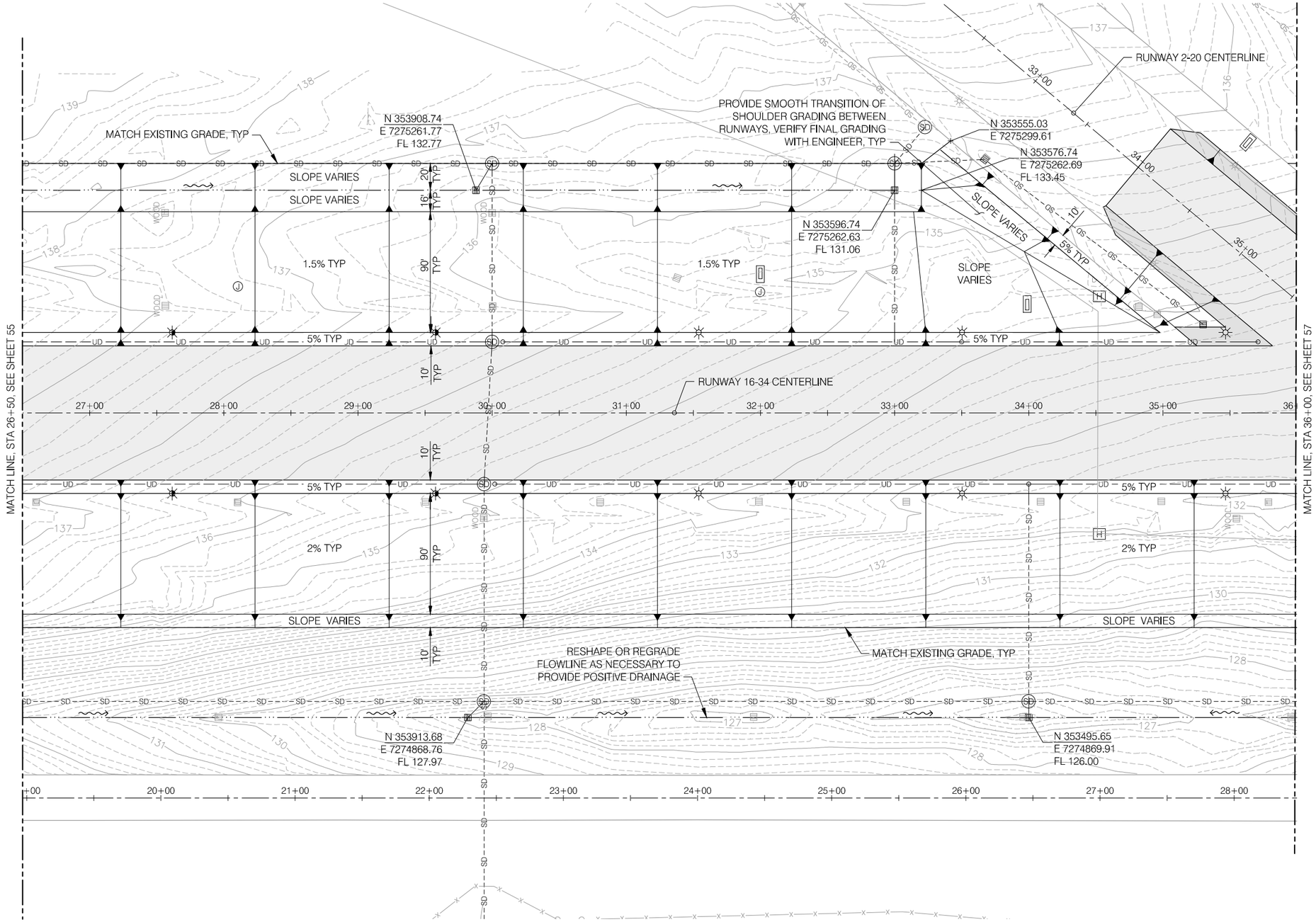

NOTES:

1. CONTRACTORS SHALL STRIP 6" OF TOPSOIL IN ALL AREAS OF CUT AND FILL OUTSIDE LIMITS OF PAVEMENT. STRIPPING SHALL BE STOCKPILED ON SITE AND APPLIED TO SURFACE OF ALL NON-PAVED AREAS DURING FINAL GRADING. COORDINATE WITH ENGINEER.
2. CONTRACTOR SHALL TIGHT MOW AND SCARIFY SURFACE IN ALL VEGETATED AREAS OF GRADING PRIOR TO CONSTRUCTION

PRECISION APPROACH ENGINEERING
5125 Southwest Hout Street
Corvallis, OR 97333
541•754•0043

REGISTERED PROFESSIONAL ENGINEER
73893PE
OREGON
JUNE 14, 2007
GEOFF W. VAUGHN
EXPIRES 6/30/2014

REVISIONS: DATE APPD.

| | |
|---|---|
| DATE: | JUNE 2013 |
| DESIGN: | TLK |
| DRAWN: | JAW |
| CHECKED: | GWV |
| REVISION NUMBER: | 0 |
| SCALE: AS SHOWN | |

NEWPORT MUNICIPAL AIRPORT
RUNWAY 16-34 REHABILITATION

# GRADING PLAN STA 26+50 TO 36+00

PRECISION APPROACH ENGINEERING, INC.
AIP NO. 3-41-0040-021

PROJECT NUMBER: NPT008

SHEET NO. 56 OF 108

06/11/13 - 9:34pm - jwade - P:\N\NPT008-RW 16-34 Rehab-Dsn\0400CAD\DWG\Sheets\NPT008-GRADING-SD.dwg