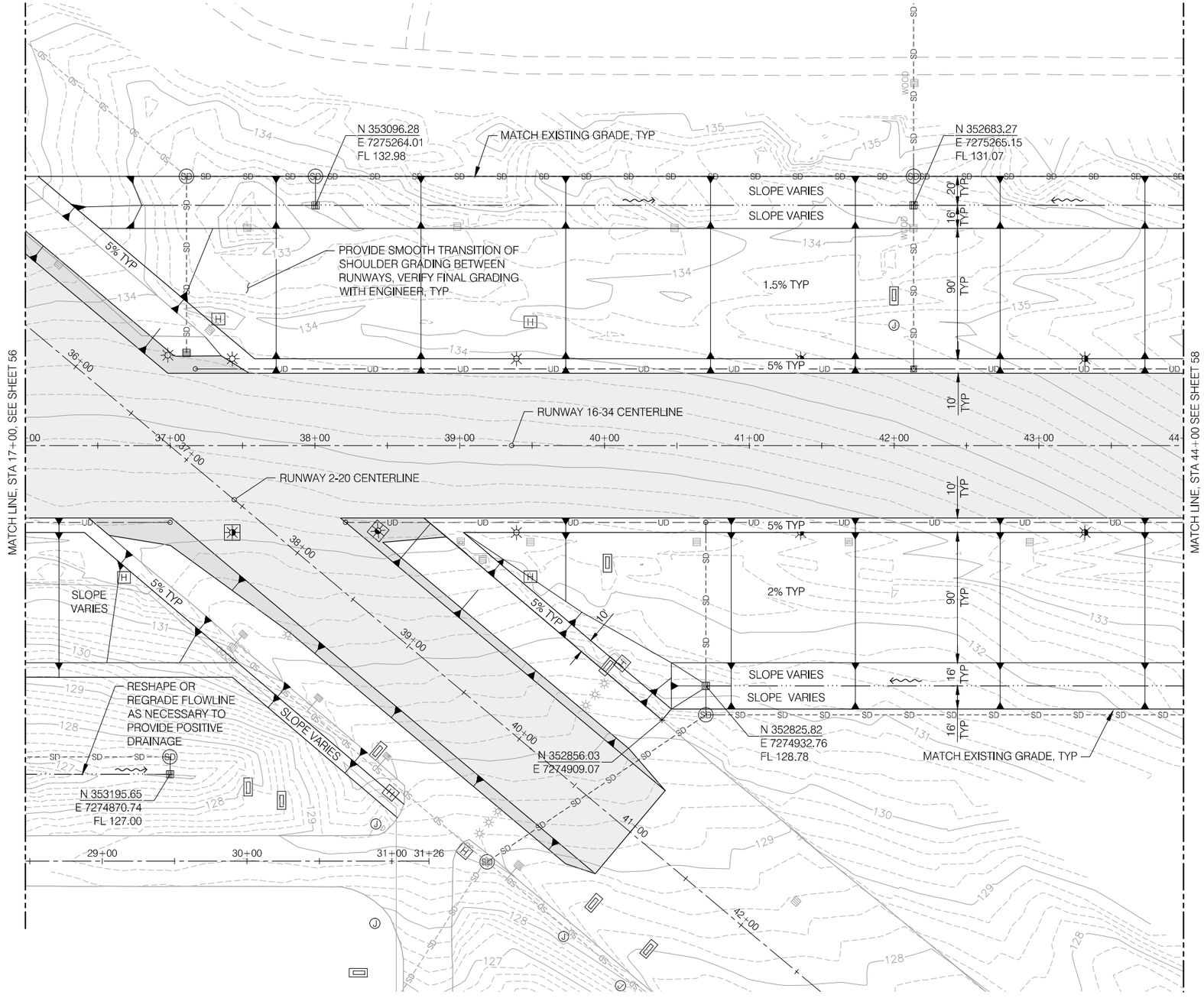

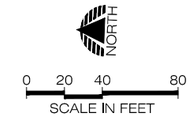

NOTES:

1. CONTRACTORS SHALL STRIP 6" OF TOPSOIL IN ALL AREAS OF CUT AND FILL OUTSIDE LIMITS OF PAVEMENT. STRIPPING SHALL BE STOCKPILED ON SITE AND APPLIED TO SURFACE OF ALL NON-PAVED AREAS DURING FINAL GRADING. COORDINATE WITH ENGINEER.
2. CONTRACTOR SHALL TIGHT MOW AND SCARIFY SURFACE IN ALL VEGETATED AREAS OF GRADING PRIOR TO CONSTRUCTION

PRECISION APPROACH ENGINEERING
5125 Southwest Hout Street
Corvallis, OR 97333
541•754•0043

REGISTERED PROFESSIONAL ENGINEER 72603PE OREGON JUNE 14, 2007 GEOFF W. VAUGHN EXPIRES 6/30/2014

REVISIONS: DATE APPD.

DATE:	JUNE 2013
DESIGN:	TLK
DRAWN:	JAW
CHECKED:	GWV
REVISION NUMBER:	0
SCALE: AS SHOWN	

NEWPORT MUNICIPAL AIRPORT
RUNWAY 16-34 REHABILITATION

GRADING PLAN STA 36+00 TO 44+00

PRECISION APPROACH ENGINEERING, INC.
AIP NO. 3-41-0040-021

PROJECT NUMBER: NPT008

SHEET NO. 57 OF 108

06/11/13 - 9:35pm - jwade - P:\N\NPT008-RW 16-34 Rehab-Dsn\0400CAD\DWG\Sheets\NPT008-GRADING-SD.dwg

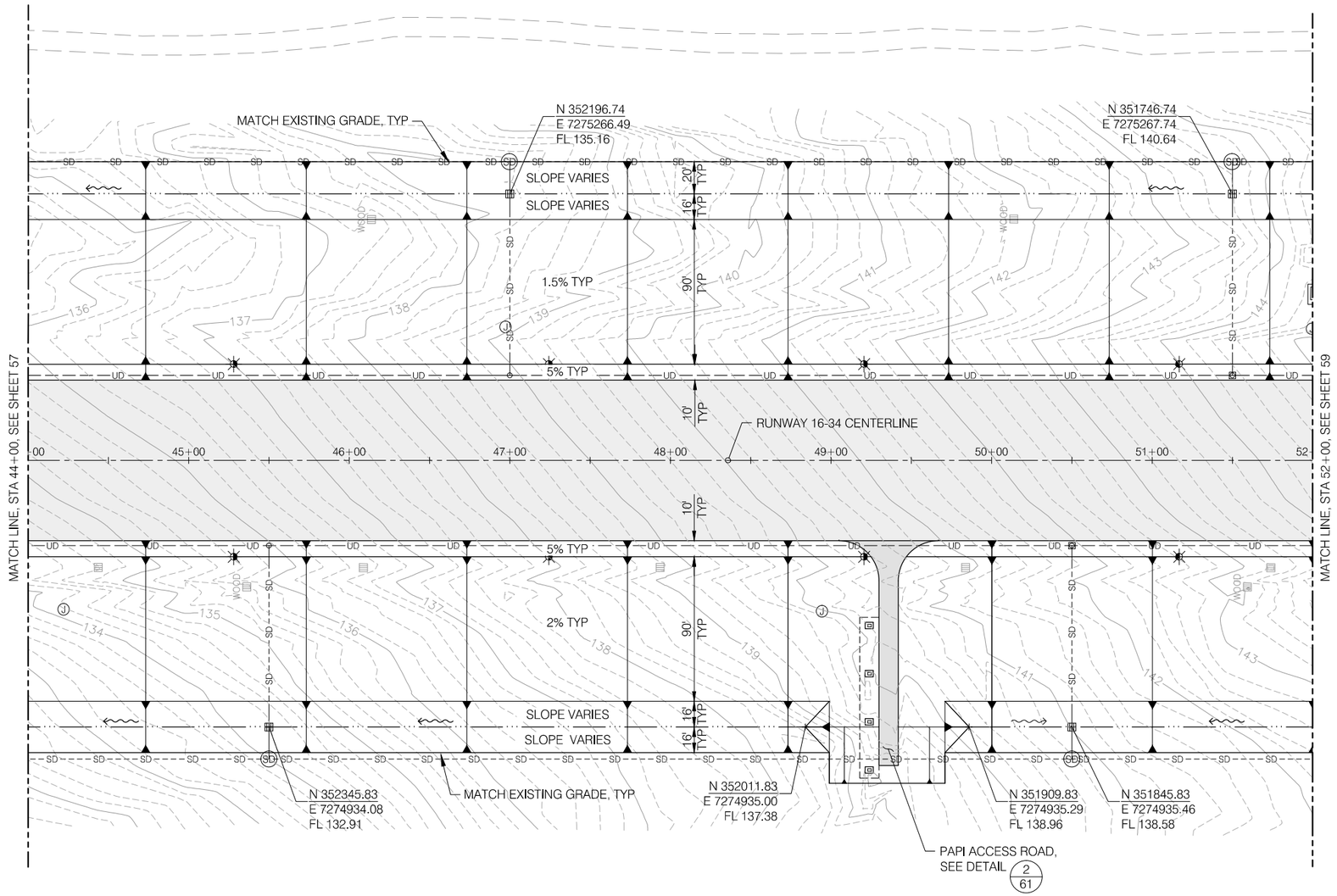

NOTES:

1. CONTRACTORS SHALL STRIP 6" OF TOPSOIL IN ALL AREAS OF CUT AND FILL OUTSIDE LIMITS OF PAVEMENT. STRIPPING SHALL BE STOCKPILED ON SITE AND APPLIED TO SURFACE OF ALL NON-PAVED AREAS DURING FINAL GRADING. COORDINATE WITH ENGINEER.
2. CONTRACTOR SHALL TIGHT MOW AND SCARIFY SURFACE IN ALL VEGETATED AREAS OF GRADING PRIOR TO CONSTRUCTION

PRECISION APPROACH ENGINEERING
5125 Southwest Hout Street
Corvallis, OR 97333
541•754•0043

REGISTERED PROFESSIONAL ENGINEER 72693PE OREGON JUNE 14, 2007 GEOFF W. VAUGHN EXPIRES 6/30/2014

REVISIONS: DATE APPD.

DATE: JUNE 2013
DESIGN: TLK
DRAWN: JAW
CHECKED: GWV
REVISION NUMBER: 0

SCALE: AS SHOWN

NEWPORT MUNICIPAL AIRPORT
RUNWAY 16-34 REHABILITATION

GRADING PLAN STA 44+00 TO 52+00

PRECISION APPROACH ENGINEERING, INC.
AIP NO. 3-41-0040-021

PROJECT NUMBER: NPT008

SHEET NO. 58 OF 108

06/11/13 - 9:35pm - jwade - P:\N\NPT008-RW 16-34 Rehab-Dsn\0400CAD\DWG\Sheets\NPT008-GRADING-SD.dwg

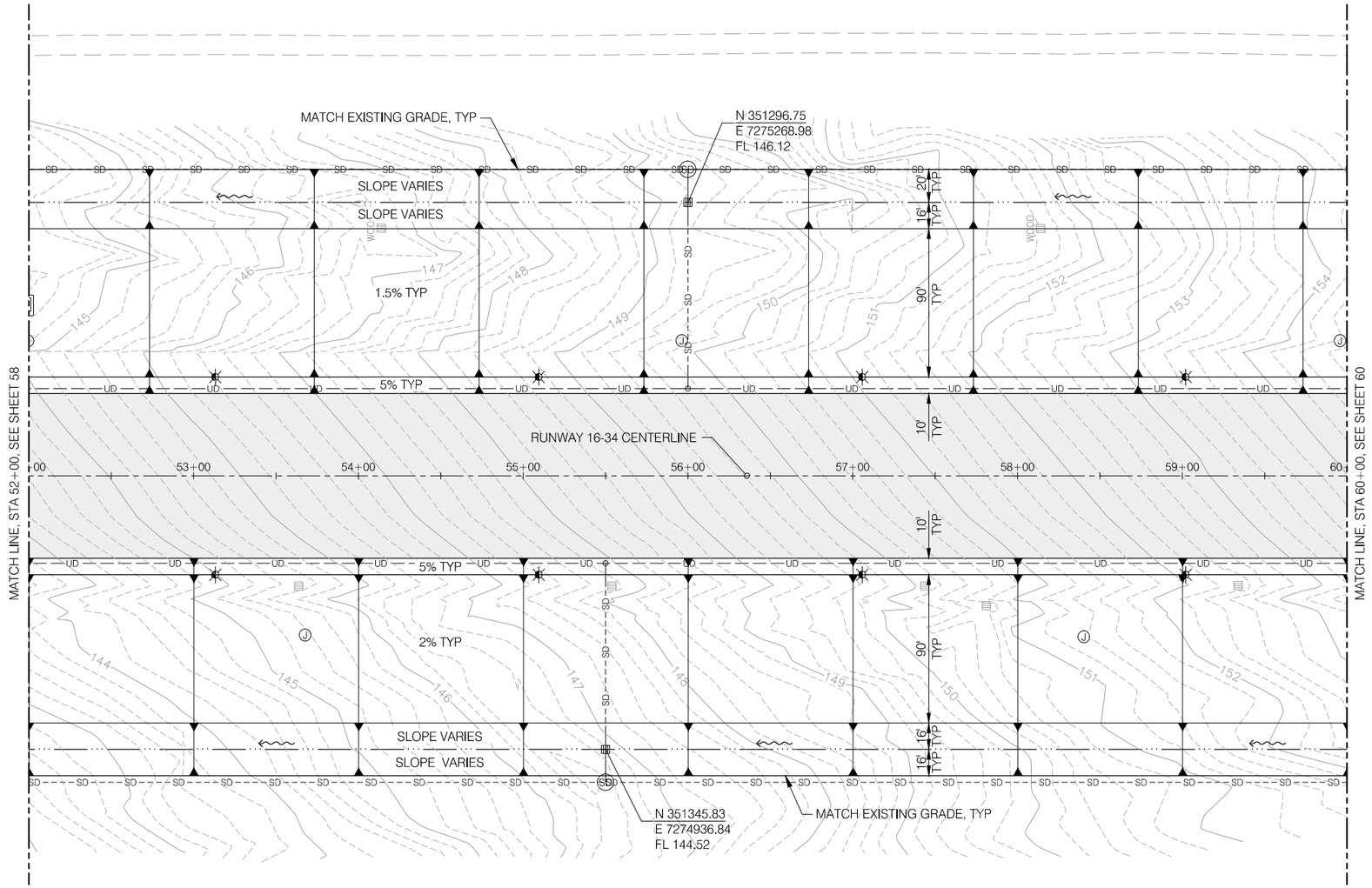

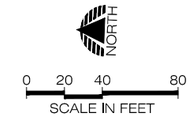

NOTES:

1. CONTRACTORS SHALL STRIP 6" OF TOPSOIL IN ALL AREAS OF CUT AND FILL OUTSIDE LIMITS OF PAVEMENT. STRIPPING SHALL BE STOCKPILED ON SITE AND APPLIED TO SURFACE OF ALL NON-PAVED AREAS DURING FINAL GRADING. COORDINATE WITH ENGINEER.
2. CONTRACTOR SHALL TIGHT MOW AND SCARIFY SURFACE IN ALL VEGETATED AREAS OF GRADING PRIOR TO CONSTRUCTION

PRECISION APPROACH ENGINEERING
5125 Southwest Hout Street
Corvallis, OR 97333
541•754•0043

REGISTERED PROFESSIONAL ENGINEER 72603PE OREGON JUNE 14, 2007 GEOFF W. VAUGHN EXPIRES 6/30/2014

REVISIONS: DATE APPD.

DATE:	JUNE 2013
DESIGN:	TLK
DRAWN:	JAW
CHECKED:	GWV
REVISION NUMBER:	0
SCALE: AS SHOWN	

NEWPORT MUNICIPAL AIRPORT
RUNWAY 16-34 REHABILITATION

GRADING PLAN STA 52+00 TO 60+00

PRECISION APPROACH ENGINEERING, INC.
AIP NO. 3-41-0040-021

PROJECT NUMBER: NPT008

SHEET NO. 59 OF 108

06/11/13 - 9:35pm - jwade - P:\N\NPT008-RW 16-34 Rehab-Dsn\0400CAD\DWG\Sheets\NPT008-GRADING-SD.dwg

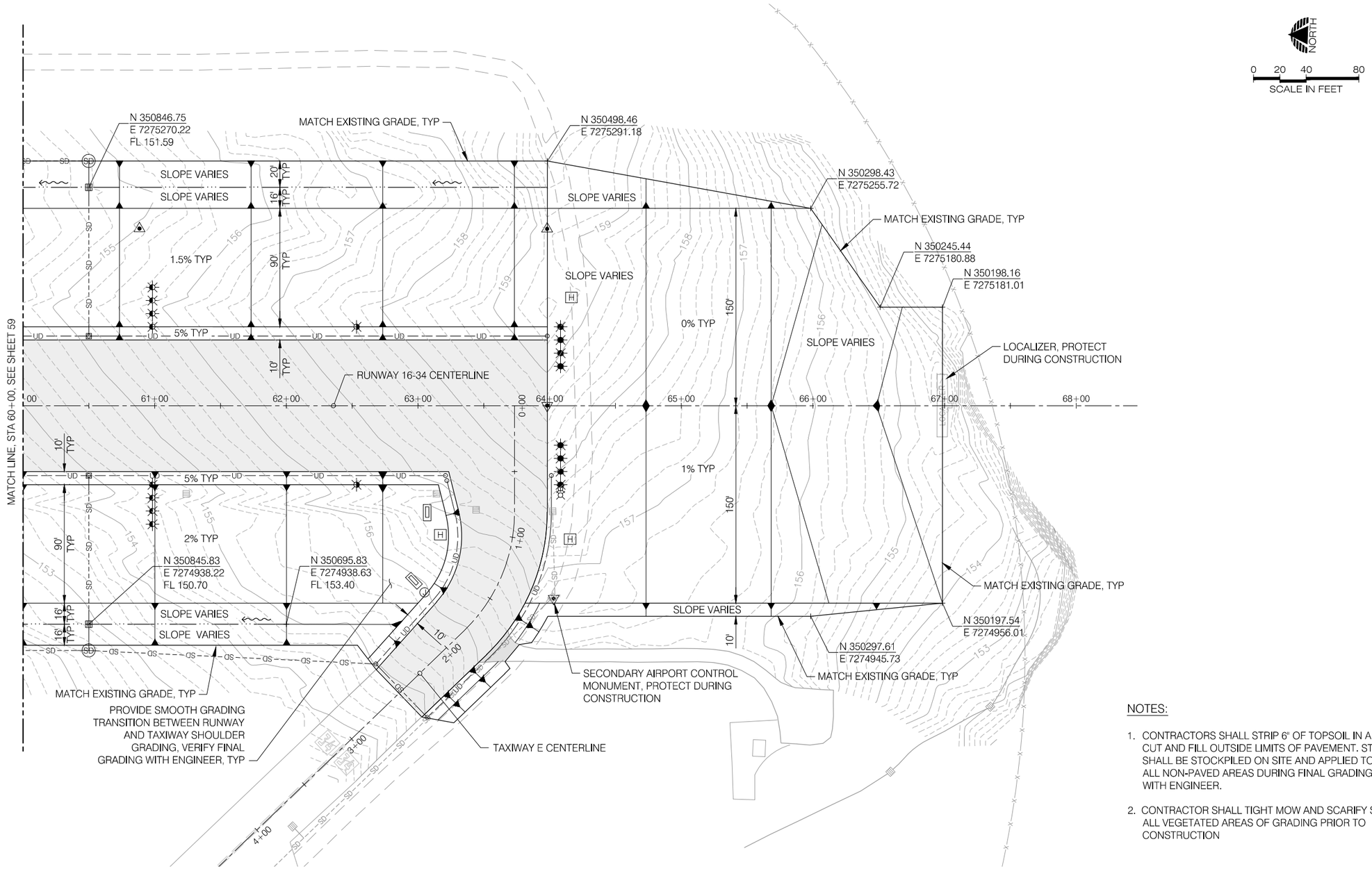

NOTES:

1. CONTRACTORS SHALL STRIP 6" OF TOPSOIL IN ALL AREAS OF CUT AND FILL OUTSIDE LIMITS OF PAVEMENT. STRIPPING SHALL BE STOCKPILED ON SITE AND APPLIED TO SURFACE OF ALL NON-PAVED AREAS DURING FINAL GRADING. COORDINATE WITH ENGINEER.
2. CONTRACTOR SHALL TIGHT MOW AND SCARIFY SURFACE IN ALL VEGETATED AREAS OF GRADING PRIOR TO CONSTRUCTION

PRECISION APPROACH ENGINEERING
5125 Southwest Hout Street
Corvallis, OR 97333
541•754•0043

REGISTERED PROFESSIONAL ENGINEER
72693PE
OREGON
JUNE 14, 2007
GEOFF W. VAUGHN
EXPIRES 6/30/2014

REVISIONS: DATE APPD.

DATE:	JUNE 2013
DESIGN:	TLK
DRAWN:	JAW
CHECKED:	GWV
REVISION NUMBER:	0
SCALE: AS SHOWN	

NEWPORT MUNICIPAL AIRPORT
RUNWAY 16-34 REHABILITATION

GRADING PLAN STA 60+00 TO 68+00

PRECISION APPROACH ENGINEERING, INC.
AIP NO. 3-41-0040-021

PROJECT NUMBER: NPT008

SHEET NO. 60 OF 108

06/11/13 - 9:35pm - jwade - P:\N\NPT008-RW 16-34 Rehab-Dsn\0400CAD\DWG\Sheets\NPT008-GRADING-SD.dwg

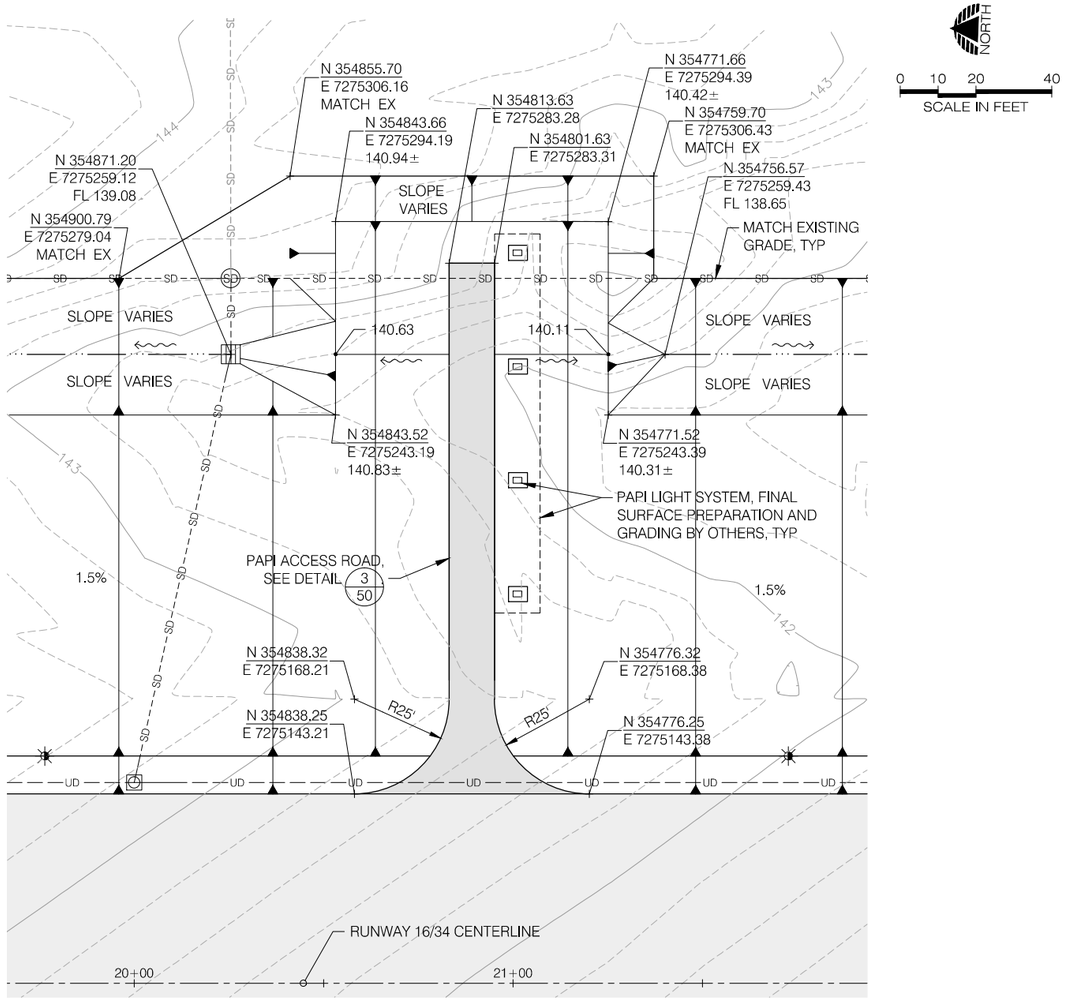

RUNWAY 16
PAPI ACCESS ROAD DETAIL 1/61
NTS

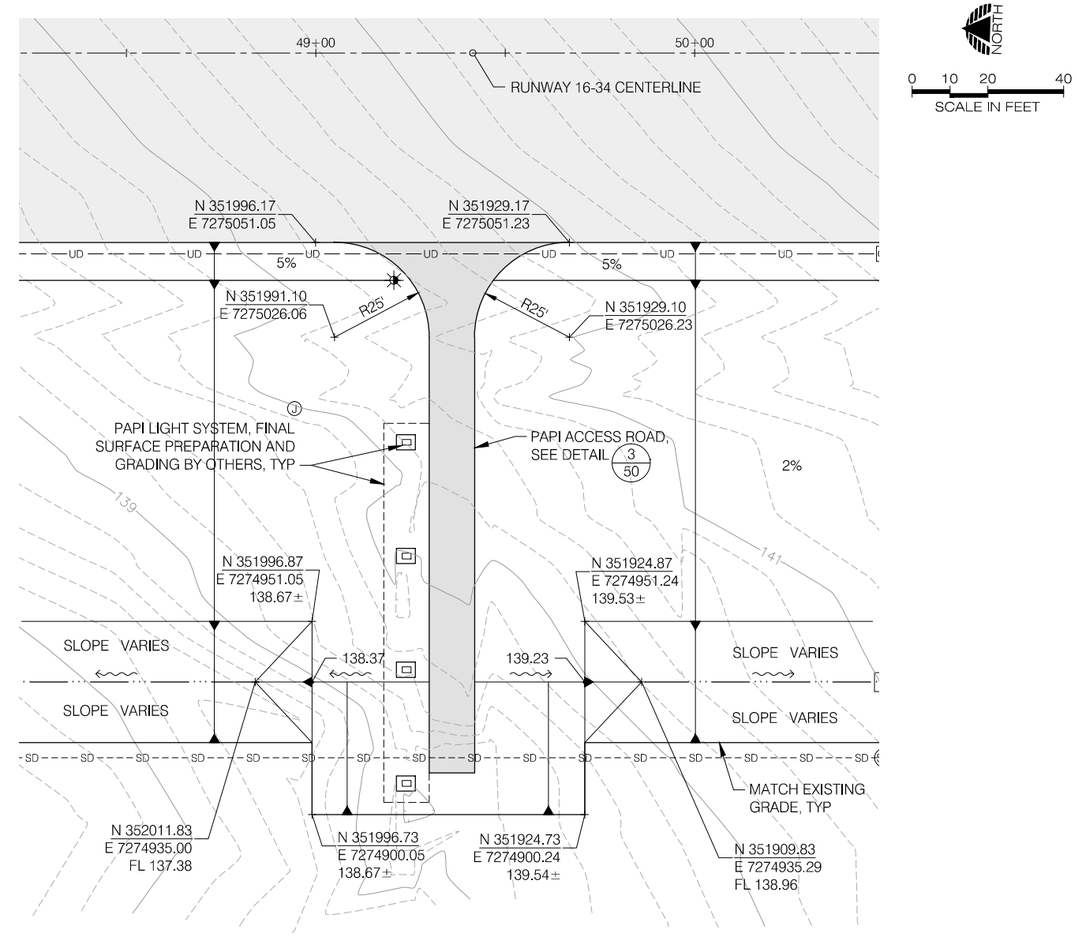

RUNWAY 34
PAPI ACCESS ROAD DETAIL 2/61
NTS

PRECISION APPROACH ENGINEERING
5125 Southwest Hout Street
Corvallis, OR 97333
541•754•0043

REGISTERED PROFESSIONAL ENGINEER 72693PE OREGON JUNE 14, 2007 GEOFF W. VAUGHN EXPIRES 6/30/2014

REVISIONS: DATE APPD.

DATE:	JUNE 2013
DESIGN:	TLK
DRAWN:	JAW
CHECKED:	GWV
REVISION NUMBER:	0
SCALE: AS SHOWN	

NEWPORT MUNICIPAL AIRPORT
RUNWAY 16-34 REHABILITATION

GRADING DETAILS

PRECISION APPROACH ENGINEERING, INC.
AIP NO. 3-41-0040-021

PROJECT NUMBER: NPT008

SHEET NO. 61 OF 108

06/11/13 - 9:35pm - jwade - P:\N\NPT008-RW 16-34 Rehab-Dsn\0400CAD\DWG\Sheets\NPT008-GRADING-SD.dwg

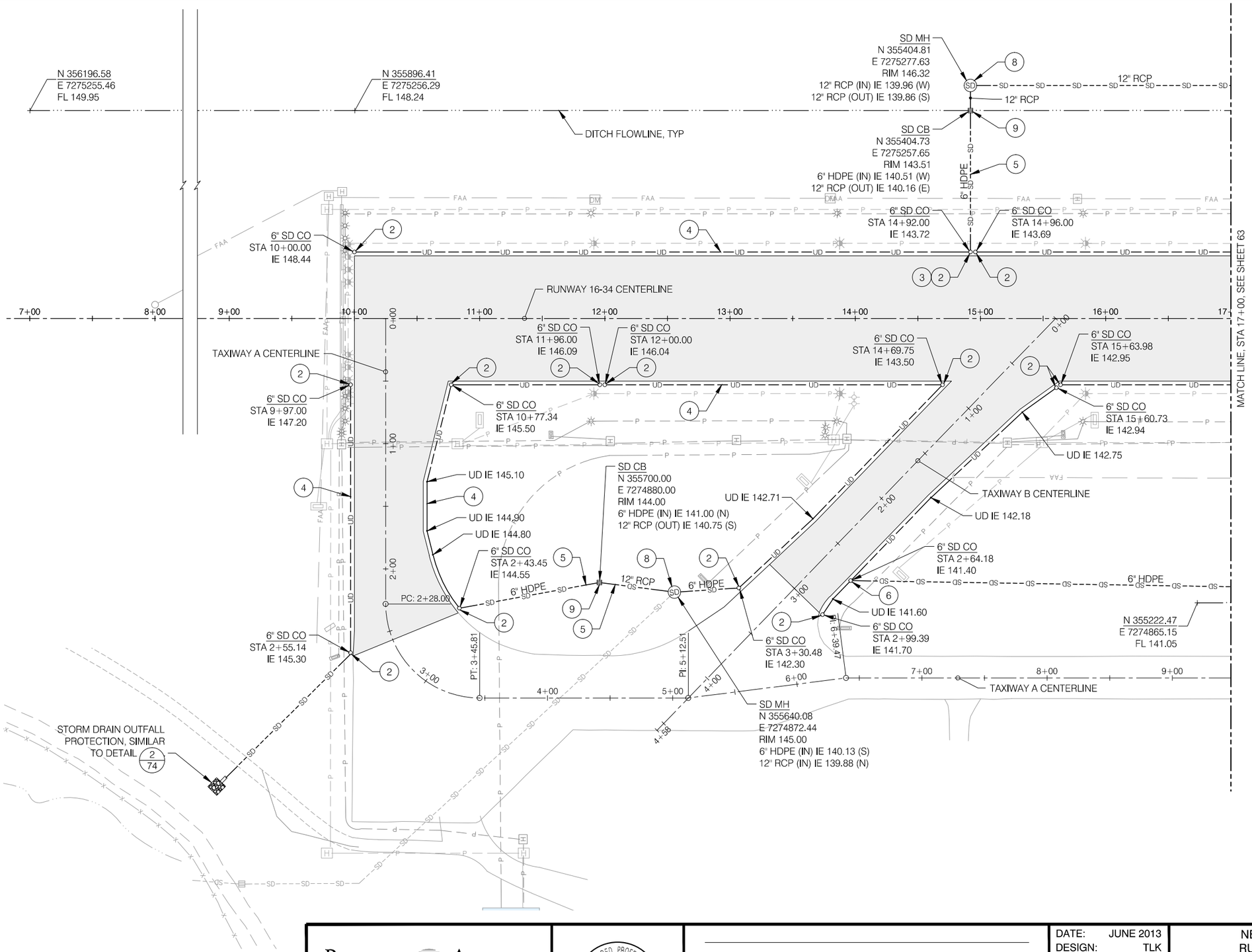

NORTH

0 20 40 80

SCALE IN FEET

LEGEND

1. INSTALL UNDERDRAIN ACCESS STRUCTURE, SEE DETAIL 3/71
2. INSTALL CLEANOUT, SEE DETAIL 3/72
3. INSTALL OUTLET CONNECTION, SEE DETAIL 2/72
4. INSTALL 6" HDPE UNDERDRAIN PIPE, SEE DETAIL 1/72
5. INSTALL PIPE AS SPECIFIED, SEE DETAIL 1/73
6. CONNECT UNDERDRAIN TO PIPE, SEE DETAIL 4/72
7. CONNECT TO EXISTING STRUCTURE, SEE DETAIL 5/72
8. INSTALL NEW MANHOLE, SEE DETAIL 1/71
9. INSTALL NEW CATCH BASIN, SEE DETAIL 2/73
10. ELECTRICAL IMPROVEMENTS, TYP, SEE ELECTRICAL LAYOUT PLAN
11. EXISTING ELECTRICAL SYSTEM TO BE REMOVED, TYP, SEE ELECTRICAL DEMOLITION PLAN

PRECISION APPROACH ENGINEERING
5125 Southwest Hout Street
Corvallis, OR 97333
541•754•0043

REGISTERED PROFESSIONAL ENGINEER 72603PE OREGON JUNE 14, 2007 GEOFF W. VAUGHN EXPIRES 6/30/2014

REVISIONS: DATE APPD.

DATE:	JUNE 2013
DESIGN:	TLK
DRAWN:	JAW
CHECKED:	GWV
REVISION NUMBER:	0
SCALE: AS SHOWN	

NEWPORT MUNICIPAL AIRPORT
RUNWAY 16-34 REHABILITATION

DRAINAGE PLAN

PRECISION APPROACH ENGINEERING, INC.
AIP NO. 3-41-0040-021

PROJECT NUMBER: NPT008

SHEET NO. 62 OF 108

06/11/13 - 9:36pm - jwade - P:\N\NPT008-RW 16-34 Rehab-Dsn\0400CAD\DWG\Sheets\NPT008-DRAINAGE.dwg

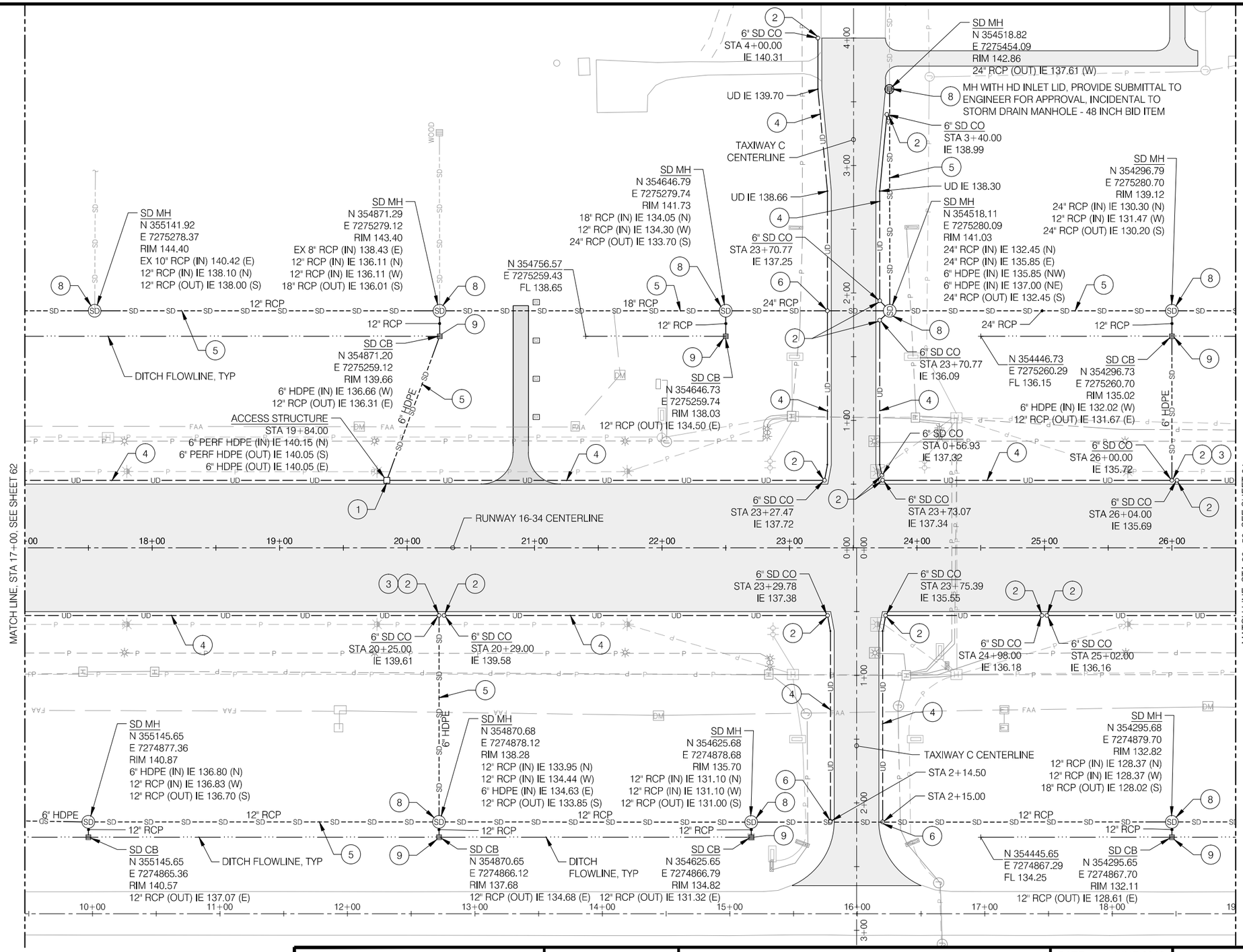

NORTH

0 20 40 80
SCALE IN FEET

LEGEND

1. INSTALL UNDERDRAIN ACCESS STRUCTURE, SEE DETAIL 3/71
2. INSTALL CLEANOUT, SEE DETAIL 3/72
3. INSTALL OUTLET CONNECTION, SEE DETAIL 2/72
4. INSTALL 6" HDPE UNDERDRAIN PIPE, SEE DETAIL 1/72
5. INSTALL PIPE AS SPECIFIED, SEE DETAIL 1/73
6. CONNECT UNDERDRAIN TO PIPE, SEE DETAIL 4/72
7. CONNECT TO EXISTING STRUCTURE, SEE DETAIL 5/72
8. INSTALL NEW MANHOLE, SEE DETAIL 1/71
9. INSTALL NEW CATCH BASIN, SEE DETAIL 2/73
10. ELECTRICAL IMPROVEMENTS, TYP, SEE ELECTRICAL LAYOUT PLAN
11. EXISTING ELECTRICAL SYSTEM TO BE REMOVED, TYP, SEE ELECTRICAL DEMOLITION PLAN

PRECISION APPROACH ENGINEERING
5125 Southwest Hout Street
Corvallis, OR 97333
541•754•0043

REGISTERED PROFESSIONAL ENGINEER 72693PE OREGON JUNE 14, 2007 GEOFF W. VAUGHN
EXPIRES 6/30/2014

REVISIONS: DATE APPD.

DATE:	JUNE 2013
DESIGN:	TLK
DRAWN:	JAW
CHECKED:	GWV
REVISION NUMBER:	0
SCALE: AS SHOWN	

NEWPORT MUNICIPAL AIRPORT
RUNWAY 16-34 REHABILITATION

DRAINAGE PLAN

PRECISION APPROACH ENGINEERING, INC.
AIP NO. 3-41-0040-021

PROJECT NUMBER: NPT008

SHEET NO. 63 OF 108

06/11/13 - 9:36pm - jwade - P:\N\NPT008-RW 16-34 Rehab-Dsn\0400CAD\DWG\Sheets\NPT008-DRAINAGE.dwg

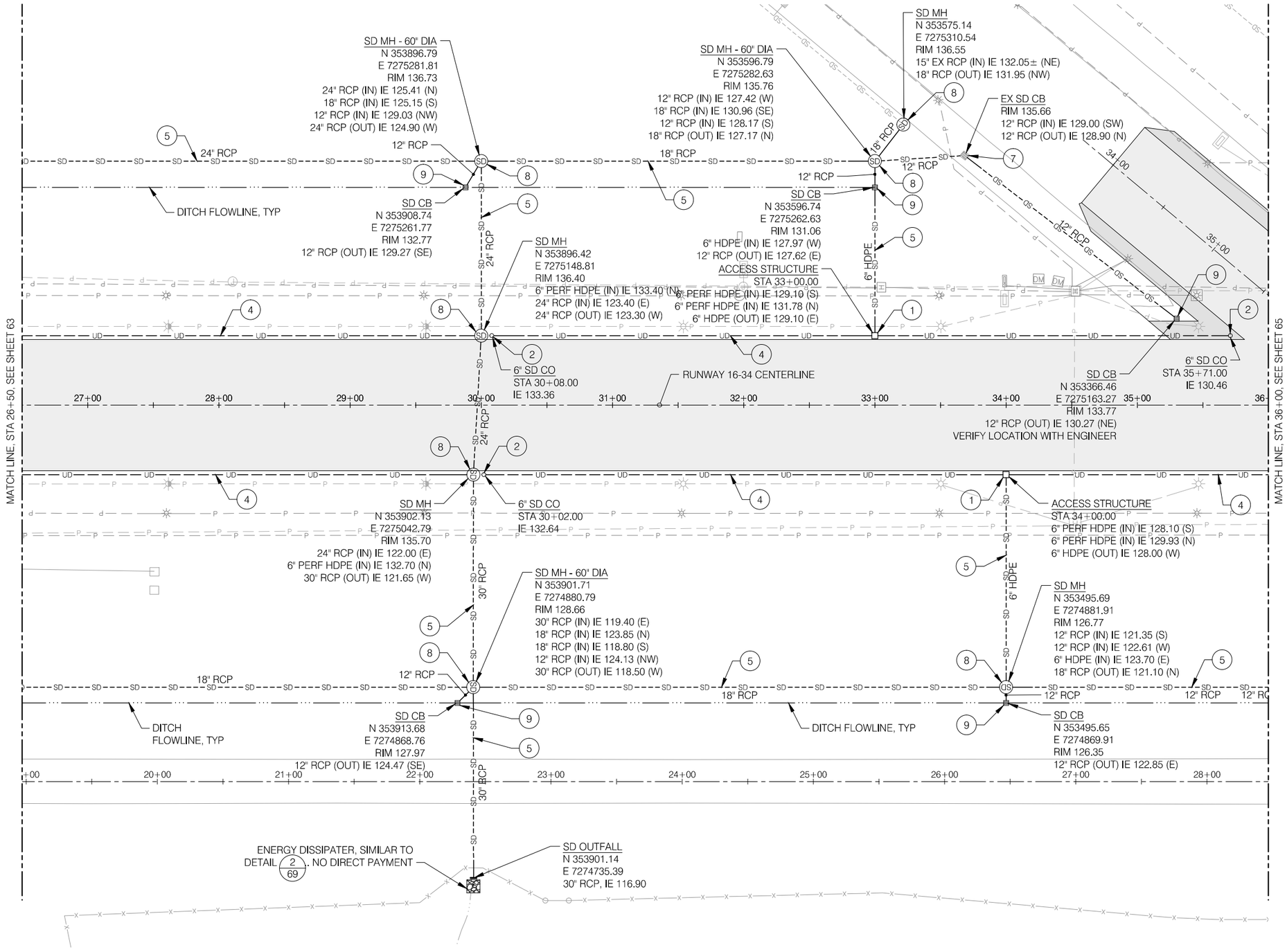

NORTH

0 20 40 80

SCALE IN FEET

LEGEND

1. INSTALL UNDERDRAIN ACCESS STRUCTURE, SEE DETAIL 3/71
2. INSTALL CLEANOUT, SEE DETAIL 3/72
3. INSTALL OUTLET CONNECTION, SEE DETAIL 2/72
4. INSTALL 6" HDPE UNDERDRAIN PIPE, SEE DETAIL 1/72
5. INSTALL PIPE AS SPECIFIED, SEE DETAIL 1/73
6. CONNECT UNDERDRAIN TO PIPE, SEE DETAIL 4/72
7. CONNECT TO EXISTING STRUCTURE, SEE DETAIL 5/72
8. INSTALL NEW MANHOLE, SEE DETAIL 1/71
9. INSTALL NEW CATCH BASIN, SEE DETAIL 2/73
10. ELECTRICAL IMPROVEMENTS, TYP, SEE ELECTRICAL LAYOUT PLAN
11. EXISTING ELECTRICAL SYSTEM TO BE REMOVED, TYP, SEE ELECTRICAL DEMOLITION PLAN

PRECISION APPROACH ENGINEERING
5125 Southwest Hout Street
Corvallis, OR 97333
541•754•0043

REGISTERED PROFESSIONAL ENGINEER 72693PE OREGON JUNE 14, 2007 GEOFF W. VAUGHN EXPIRES 6/30/2014

REVISIONS: DATE APPD.

DATE:	JUNE 2013
DESIGN:	TLK
DRAWN:	JAW
CHECKED:	GWV
REVISION NUMBER:	0
SCALE: AS SHOWN	

NEWPORT MUNICIPAL AIRPORT
RUNWAY 16-34 REHABILITATION

DRAINAGE PLAN

PRECISION APPROACH ENGINEERING, INC.
AIP NO. 3-41-0040-021

PROJECT NUMBER: NPT008

SHEET NO. 64 OF 108

06/11/13 - 9:37pm - jwade - P:\N\NPT008-RW 16-34 Rehab-Dsn\0400CAD\DWG\Sheets\NPT008-DRAINAGE.dwg

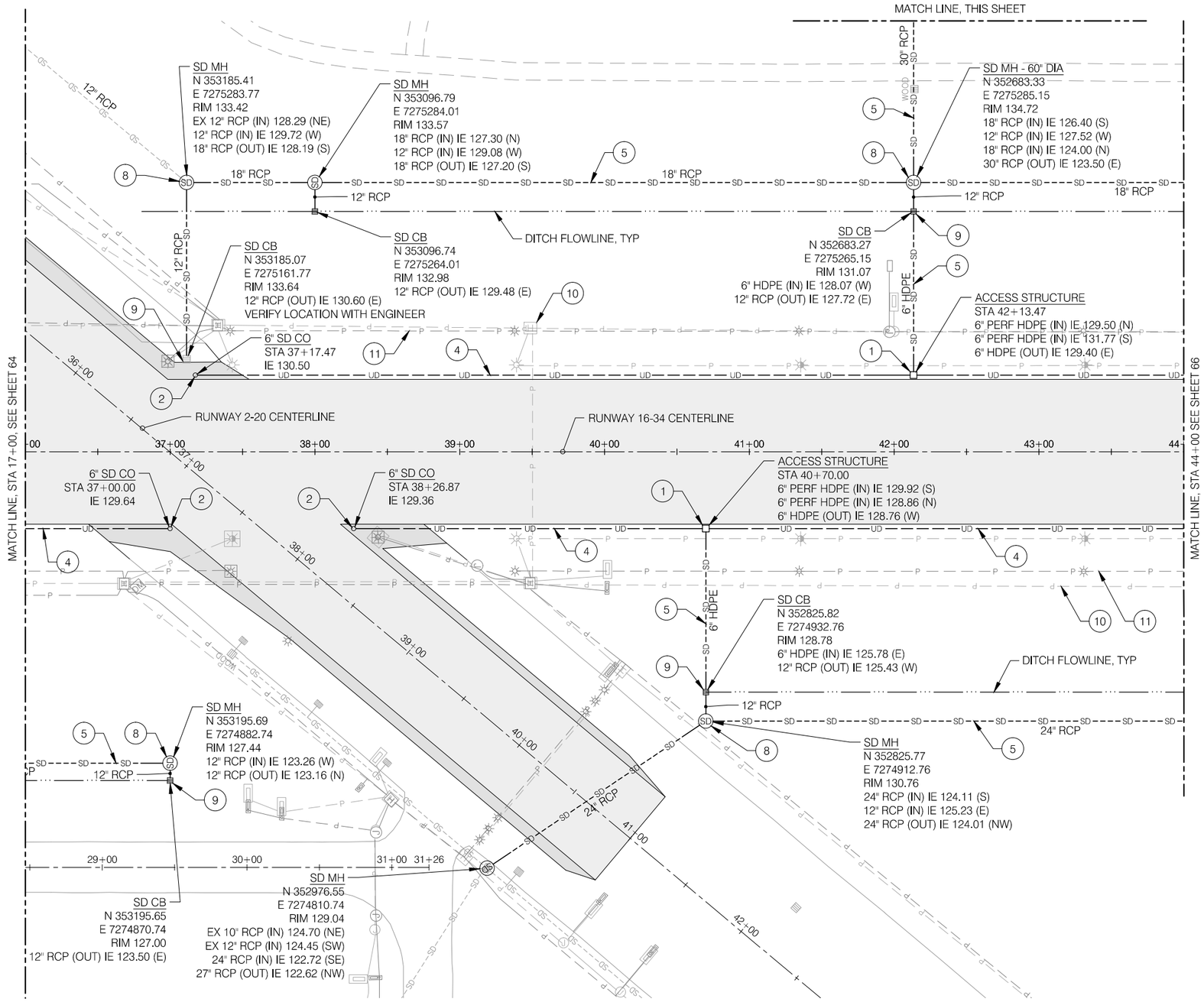

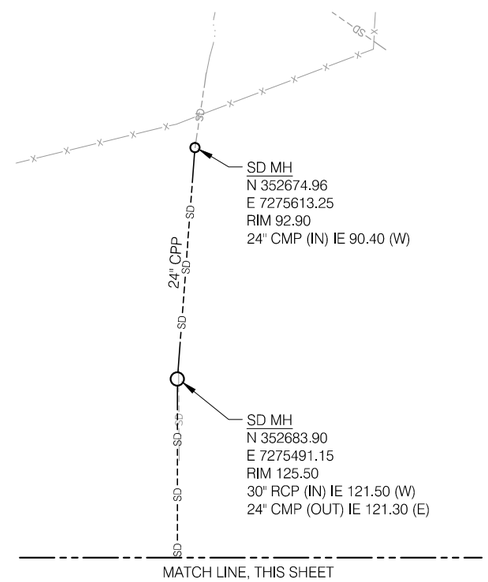

NORTH

0 20 40 80

SCALE IN FEET

LEGEND

1. INSTALL UNDERDRAIN ACCESS STRUCTURE, SEE DETAIL 3/71
2. INSTALL CLEANOUT, SEE DETAIL 3/72
3. INSTALL OUTLET CONNECTION, SEE DETAIL 2/72
4. INSTALL 6" HDPE UNDERDRAIN PIPE, SEE DETAIL 1/72
5. INSTALL PIPE AS SPECIFIED, SEE DETAIL 1/73
6. CONNECT UNDERDRAIN TO PIPE, SEE DETAIL 4/72
7. CONNECT TO EXISTING STRUCTURE, SEE DETAIL 5/72
8. INSTALL NEW MANHOLE, SEE DETAIL 1/71
9. INSTALL NEW CATCH BASIN, SEE DETAIL 2/73
10. ELECTRICAL IMPROVEMENTS, TYP, SEE ELECTRICAL LAYOUT PLAN
11. EXISTING ELECTRICAL SYSTEM TO BE REMOVED, TYP, SEE ELECTRICAL DEMOLITION PLAN

PRECISION APPROACH ENGINEERING
5125 Southwest Hout Street
Corvallis, OR 97333
541•754•0043

REGISTERED PROFESSIONAL ENGINEER — OREGON — JUNE 14, 2007 — GEOFF W. VAUGHN — EXPIRES 6/30/2014

REVISIONS: DATE APPD.

DATE:	JUNE 2013
DESIGN:	TLK
DRAWN:	JAW
CHECKED:	GWV
REVISION NUMBER:	0
SCALE: AS SHOWN	

NEWPORT MUNICIPAL AIRPORT
RUNWAY 16-34 REHABILITATION

DRAINAGE PLAN

PRECISION APPROACH ENGINEERING, INC.
AIP NO. 3-41-0040-021

PROJECT NUMBER: NPT008

SHEET NO. 65 OF 108

06/11/13 - 9:37pm - jwade - P:\N\NPT008-RW 16-34 Rehab-Dsn\0400CAD\DWG\Sheets\NPT008-DRAINAGE.dwg

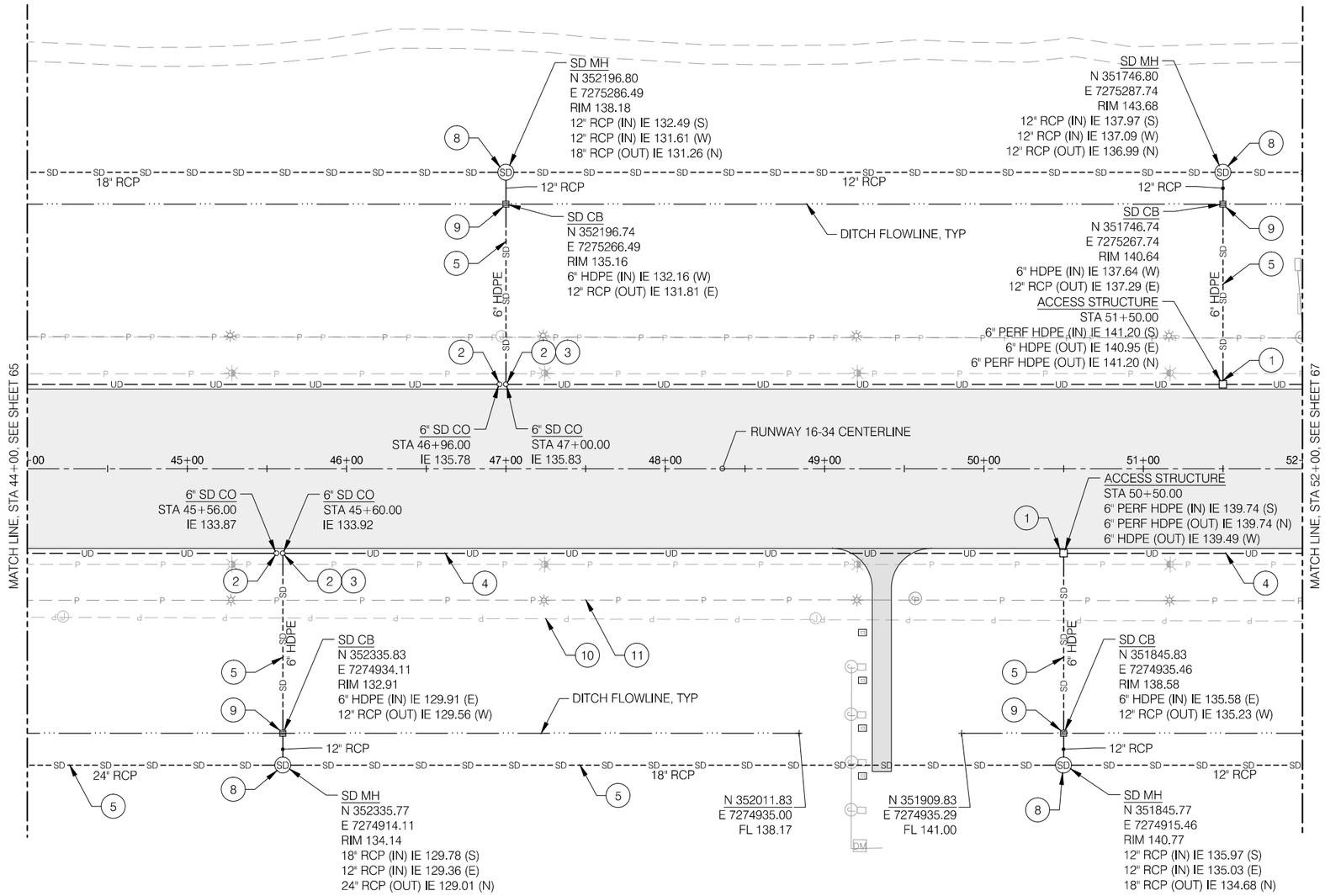

NORTH

0 20 40 80

SCALE IN FEET

LEGEND

1. INSTALL UNDERDRAIN ACCESS STRUCTURE, SEE DETAIL 3/71
2. INSTALL CLEANOUT, SEE DETAIL 3/72
3. INSTALL OUTLET CONNECTION, SEE DETAIL 2/72
4. INSTALL 6" HDPE UNDERDRAIN PIPE, SEE DETAIL 1/72
5. INSTALL PIPE AS SPECIFIED, SEE DETAIL 1/73
6. CONNECT UNDERDRAIN TO PIPE, SEE DETAIL 4/72
7. CONNECT TO EXISTING STRUCTURE, SEE DETAIL 5/72
8. INSTALL NEW MANHOLE, SEE DETAIL 1/71
9. INSTALL NEW CATCH BASIN, SEE DETAIL 2/73
10. ELECTRICAL IMPROVEMENTS, TYP, SEE ELECTRICAL LAYOUT PLAN
11. EXISTING ELECTRICAL SYSTEM TO BE REMOVED, TYP, SEE ELECTRICAL DEMOLITION PLAN

PRECISION APPROACH ENGINEERING
5125 Southwest Hout Street
Corvallis, OR 97333
541•754•0043

REGISTERED PROFESSIONAL ENGINEER 72600PE OREGON JUNE 14, 2007 GEOFF W. VAUGHN EXPIRES 6/30/2014

REVISIONS: DATE APPD.

DATE:	JUNE 2013
DESIGN:	TLK
DRAWN:	JAW
CHECKED:	GWV
REVISION NUMBER:	0
SCALE: AS SHOWN	

NEWPORT MUNICIPAL AIRPORT
RUNWAY 16-34 REHABILITATION

DRAINAGE PLAN

PRECISION APPROACH ENGINEERING, INC.
AIP NO. 3-41-0040-021

PROJECT NUMBER: NPT008

SHEET NO. 66 OF 108

06/11/13 - 9:37pm - jwade - P:\N\NPT008-RW 16-34 Rehab-Dsn\0400CAD\DWG\Sheets\NPT008-DRAINAGE.dwg

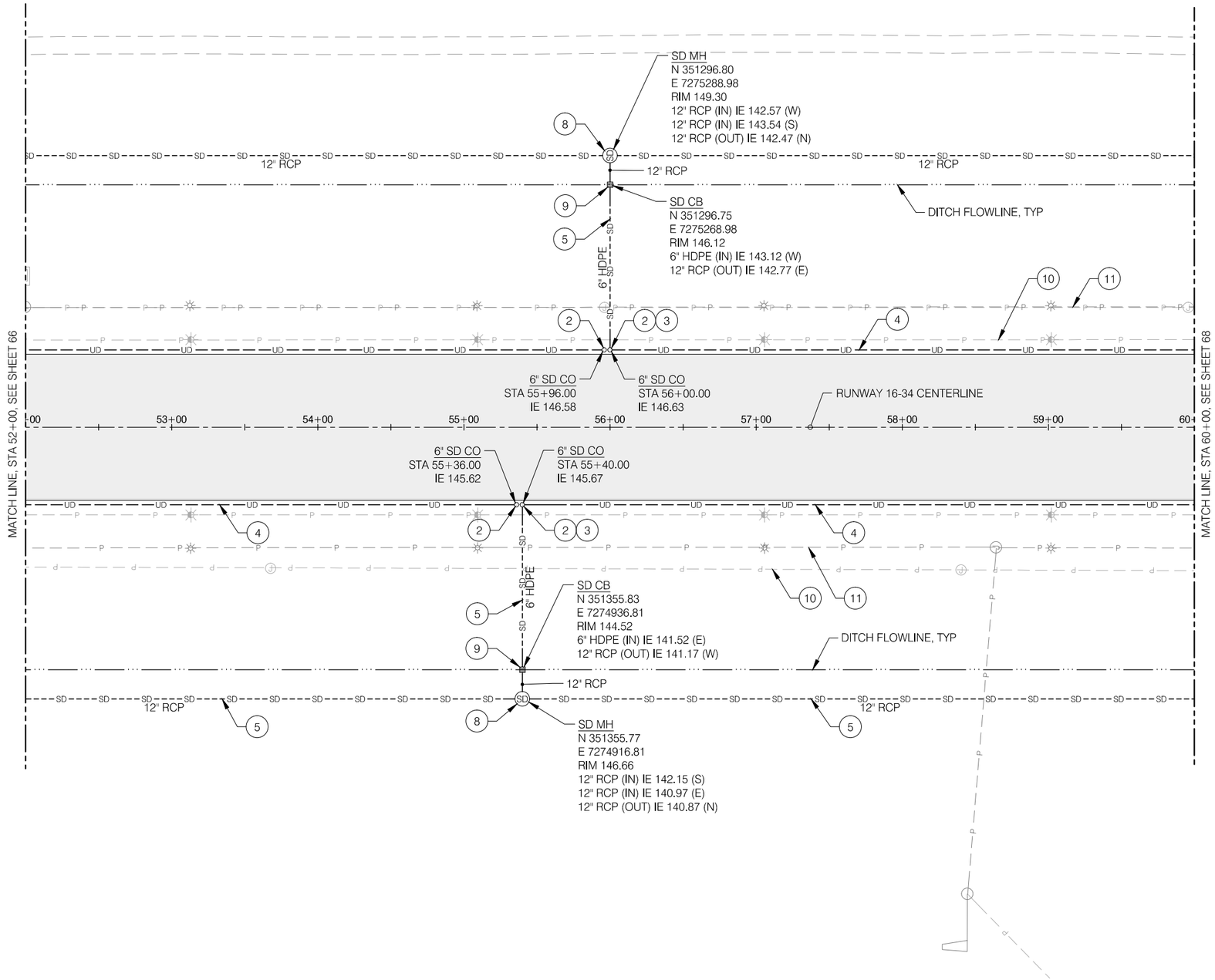

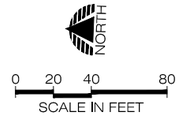

LEGEND

1. INSTALL UNDERDRAIN ACCESS STRUCTURE, SEE DETAIL 3/71
2. INSTALL CLEANOUT, SEE DETAIL 3/72
3. INSTALL OUTLET CONNECTION, SEE DETAIL 2/72
4. INSTALL 6" HDPE UNDERDRAIN PIPE, SEE DETAIL 1/72
5. INSTALL PIPE AS SPECIFIED, SEE DETAIL 1/73
6. CONNECT UNDERDRAIN TO PIPE, SEE DETAIL 4/72
7. CONNECT TO EXISTING STRUCTURE, SEE DETAIL 5/72
8. INSTALL NEW MANHOLE, SEE DETAIL 1/71
9. INSTALL NEW CATCH BASIN, SEE DETAIL 2/73
10. ELECTRICAL IMPROVEMENTS, TYP, SEE ELECTRICAL LAYOUT PLAN
11. EXISTING ELECTRICAL SYSTEM TO BE REMOVED, TYP, SEE ELECTRICAL DEMOLITION PLAN

PRECISION APPROACH ENGINEERING
5125 Southwest Hout Street
Corvallis, OR 97333
541•754•0043

REGISTERED PROFESSIONAL ENGINEER 72693PE OREGON JUNE 14, 2007 GEOFF W. VAUGHN
EXPIRES 6/30/2014

REVISIONS: DATE APPD.

DATE:	JUNE 2013
DESIGN:	TLK
DRAWN:	JAW
CHECKED:	GWV
REVISION NUMBER:	0
SCALE: AS SHOWN	

NEWPORT MUNICIPAL AIRPORT
RUNWAY 16-34 REHABILITATION

DRAINAGE PLAN

PRECISION APPROACH ENGINEERING, INC.
AIP NO. 3-41-0040-021

PROJECT NUMBER: NPT008

SHEET NO. 67 OF 108

06/11/13 - 9:37pm - jwade - P:\N\NPT008-RW 16-34 Rehab-Dsn\0400CAD\DWG\Sheets\NPT008-DRAINAGE.dwg

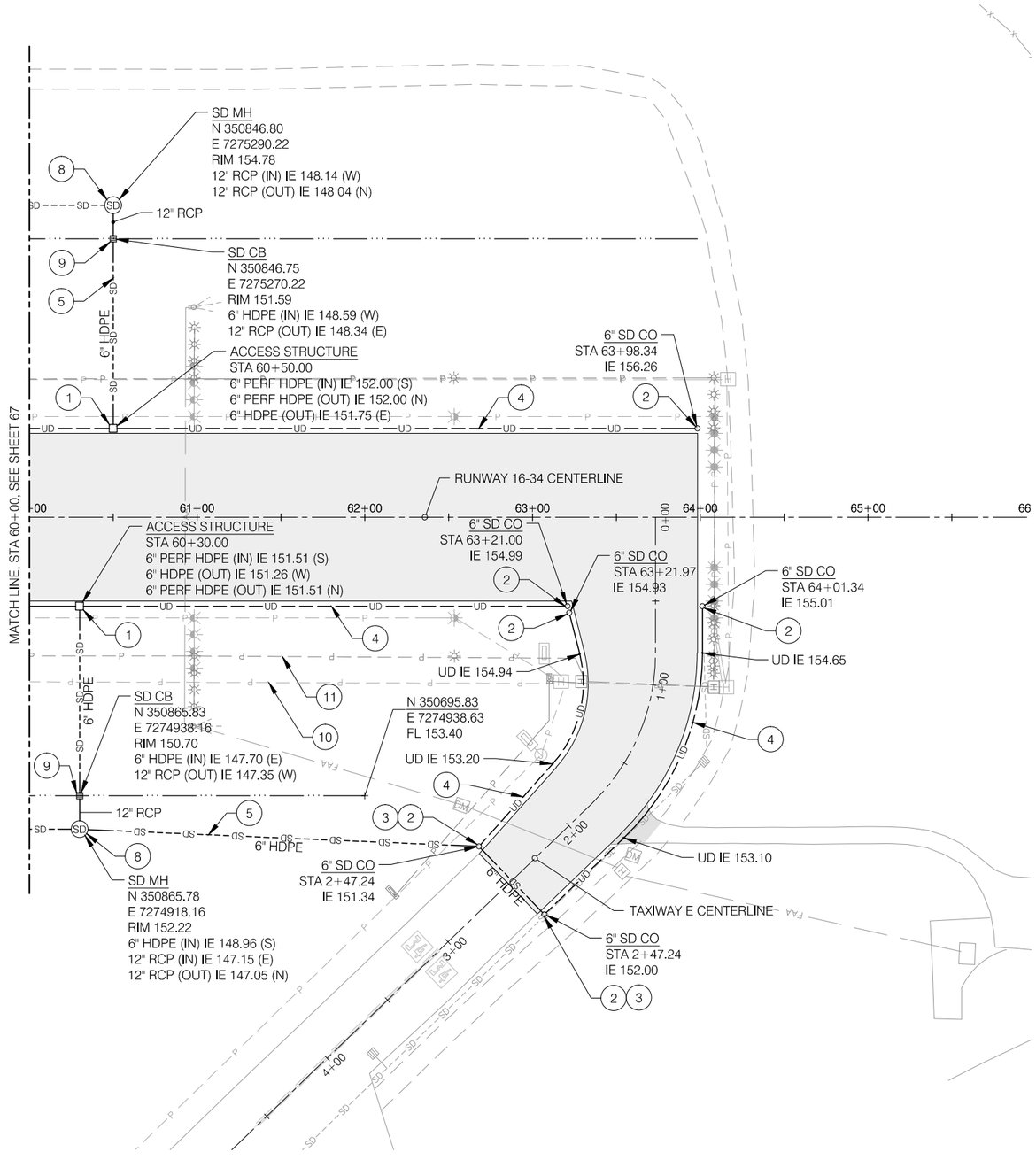

NORTH

0 20 40 80

SCALE IN FEET

LEGEND

1. INSTALL UNDERDRAIN ACCESS STRUCTURE, SEE DETAIL 3/71
2. INSTALL CLEANOUT, SEE DETAIL 3/72
3. INSTALL OUTLET CONNECTION, SEE DETAIL 2/72
4. INSTALL 6" HDPE UNDERDRAIN PIPE, SEE DETAIL 1/72
5. INSTALL PIPE AS SPECIFIED, SEE DETAIL 1/73
6. CONNECT UNDERDRAIN TO PIPE, SEE DETAIL 4/72
7. CONNECT TO EXISTING STRUCTURE, SEE DETAIL 5/72
8. INSTALL NEW MANHOLE, SEE DETAIL 1/71
9. INSTALL NEW CATCH BASIN, SEE DETAIL 2/73
10. ELECTRICAL IMPROVEMENTS, TYP, SEE ELECTRICAL LAYOUT PLAN
11. EXISTING ELECTRICAL SYSTEM TO BE REMOVED, TYP, SEE ELECTRICAL DEMOLITION PLAN

PRECISION APPROACH ENGINEERING
5125 Southwest Hout Street
Corvallis, OR 97333
541•754•0043

REGISTERED PROFESSIONAL ENGINEER
OREGON
JUNE 14, 2007
GEOFF W. VAUGHN
EXPIRES 6/30/2014

REVISIONS: DATE APPD.

DATE:	JUNE 2013
DESIGN:	TLK
DRAWN:	JAW
CHECKED:	GWV
REVISION NUMBER:	0
SCALE: AS SHOWN	

NEWPORT MUNICIPAL AIRPORT
RUNWAY 16-34 REHABILITATION

DRAINAGE PLAN

PRECISION APPROACH ENGINEERING, INC.
AIP NO. 3-41-0040-021

PROJECT NUMBER: NPT008

SHEET NO. 68 OF 108

06/11/13 - 9:38pm - jwade - P:\N\NPT008-RW 16-34 Rehab-Dsn\0400CAD\DWG\Sheets\NPT008-DRAINAGE.dwg

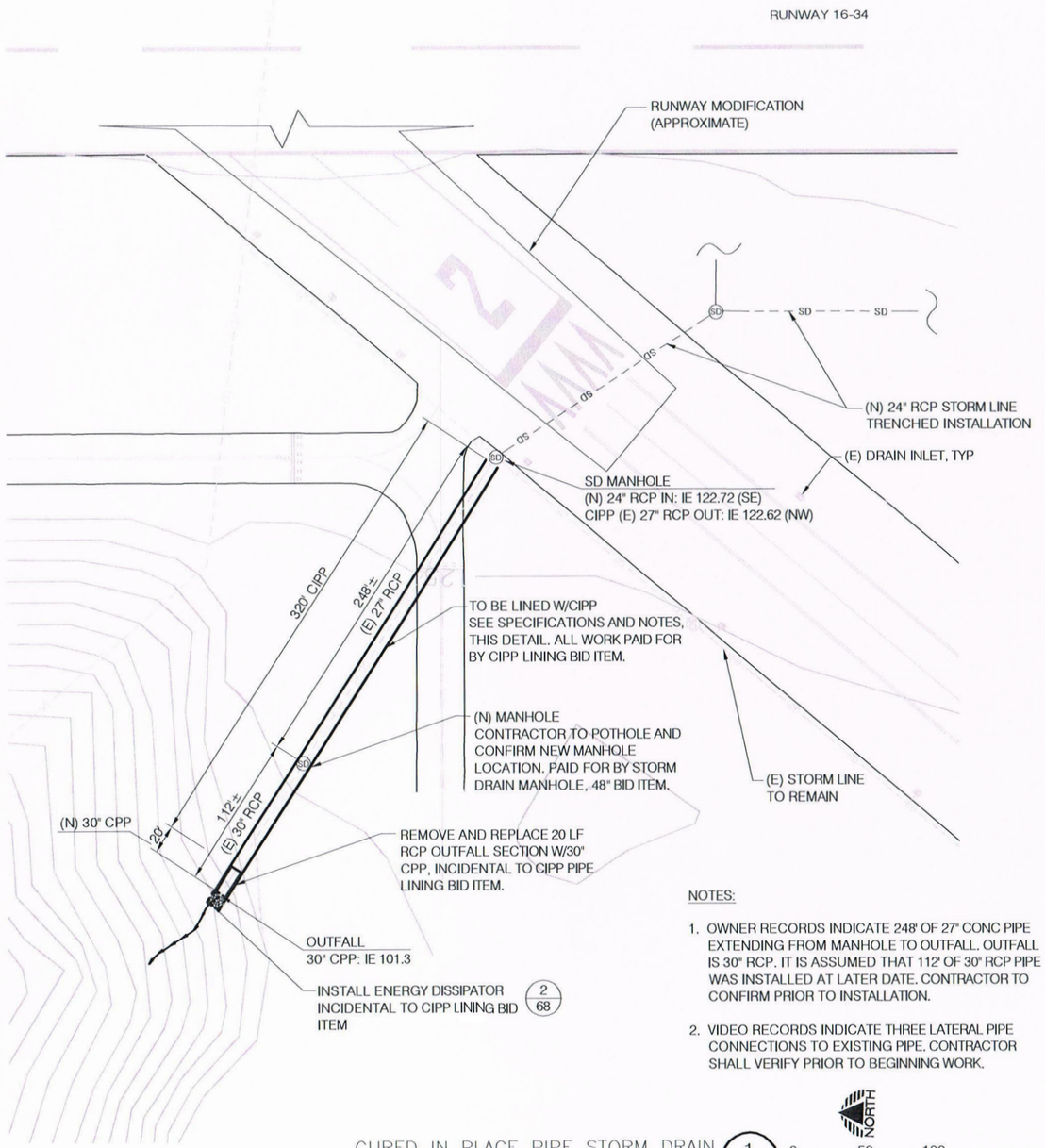

NOTES:

1. OWNER RECORDS INDICATE 248' OF 27" CONC PIPE EXTENDING FROM MANHOLE TO OUTFALL. OUTFALL IS 30" RCP. IT IS ASSUMED THAT 112' OF 30" RCP PIPE WAS INSTALLED AT LATER DATE. CONTRACTOR TO CONFIRM PRIOR TO INSTALLATION.
2. VIDEO RECORDS INDICATE THREE LATERAL PIPE CONNECTIONS TO EXISTING PIPE. CONTRACTOR SHALL VERIFY PRIOR TO BEGINNING WORK.

CURED IN PLACE PIPE STORM DRAIN 1/69

1"=50'

NORTH

0 50 100

SCALE IN FEET

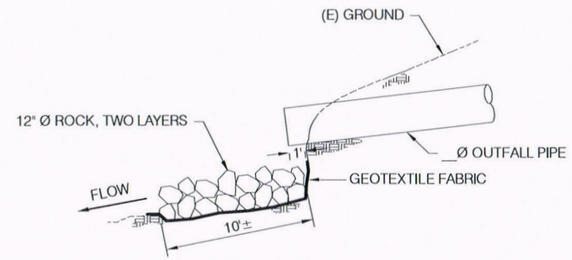

SECTION–A

NOTES:

1. ROCK SHALL BE ANGULAR, UNIFORM IN SIZE, AND DURABLE (NO CRACKS OR DEFECTS).
2. ROCK SHALL BE PLACED TIGHTLY TOGETHER W/A MINIMUM OF THREE CONTACT POINTS.
3. ALL GAPS AND VOIDS SHALL BE FILLED WITH 2"-0" DRAIN ROCK.
4. BEDDING FABRIC WILL BE 6 OZ, NON-WOVEN DRAIN FABRIC.
5. FIRST LAYER OF 12" ROCK SHALL BE EMBEDDED 4".
6. EXISTING GROUND SURFACE SHALL BE CLEARED AND GRUBBED PRIOR TO FABRIC INSTALLATION.

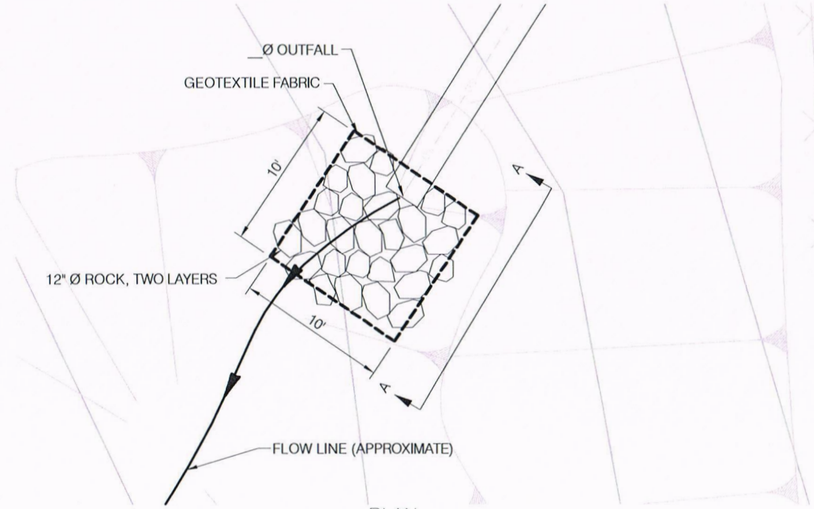

PLAN

ENERGY DISSIPATOR DETAIL 2/69

1"=5'

0 5 10

SCALE IN FEET

REGISTERED PROFESSIONAL ENGINEER 11,146 OREGON JULY 17, 1981 RONALD F. STILLMAKER EXPIRES 06/30/14

PRECISION APPROACH ENGINEERING
5125 Southwest Hout Street
Corvallis, OR 97333
541•754•0043

SHN CONSULTING ENGINEERS & GEOLOGISTS, INC.
275 MARKET AVENUE (541)266-9890
COOS BAY, OR 97420 FAX (541)266-9496

REVISIONS: DATE APPD.

DATE:	JUNE 2013
DESIGN:	RFS
DRAWN:	FMK
CHECKED:	FMK
REVISION NUMBER:	0
SCALE: AS SHOWN	

NEWPORT MUNICIPAL AIRPORT
RUNWAY 16-34 REHABILITATION

PIPE OUTFALL E

PRECISION APPROACH ENGINEERING, INC.
AIP NO. 3-41-0040-021

PROJECT NUMBER: **NPT008**

SHEET NO. **69** OF **108**

06/11/13 - 9:23am - fknox - \\Coosbaysvr1\projects\2013\613013-NwptAirpt\SWPP\Dwgs\613013-STORM-OUTFALLS-2.dwg

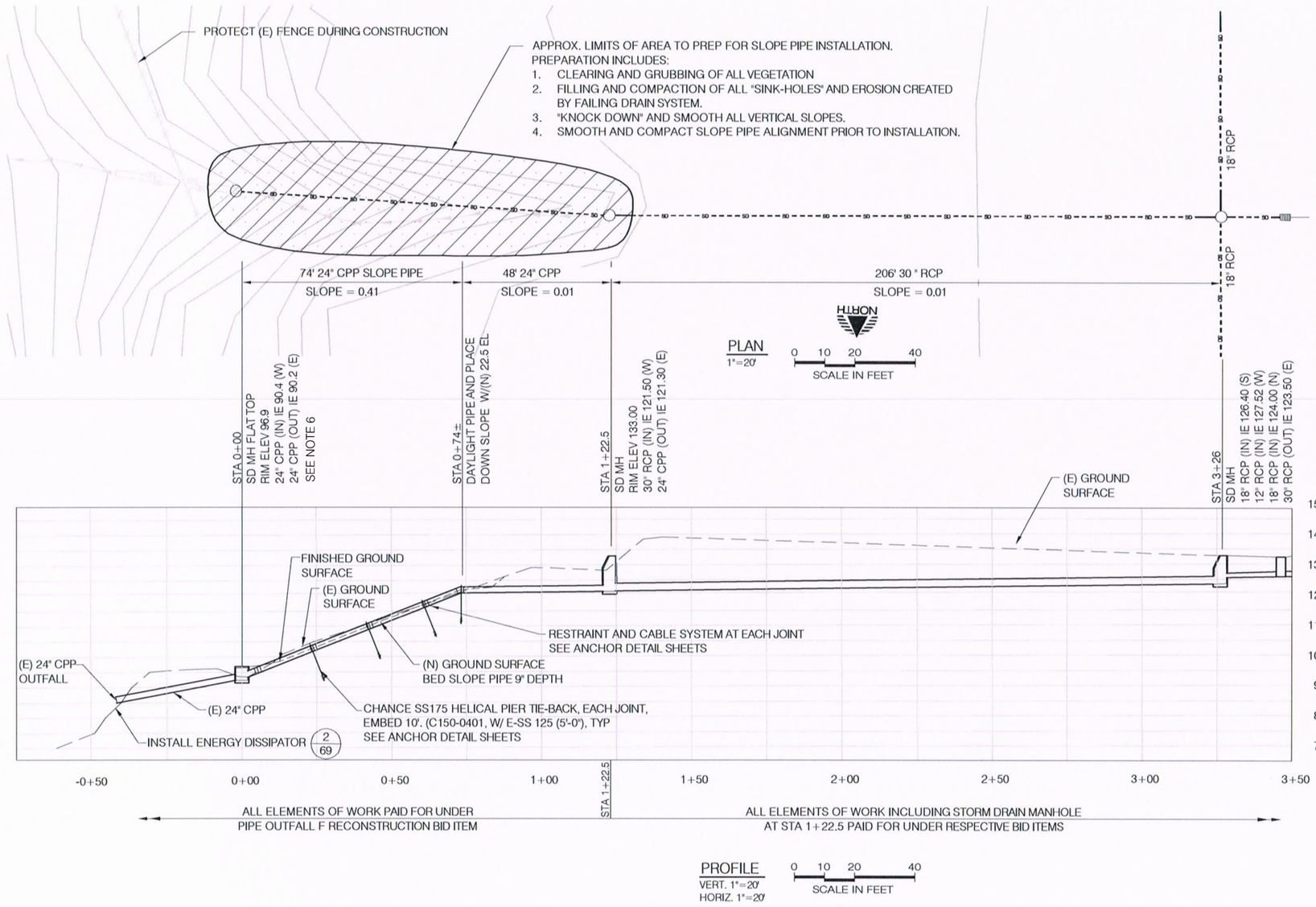

NOTES:

1. (N) PIPE TO BE BEDDED 9" MIN DEPTH.
2. AREAS DISTURBED BY CONSTRUCTION ACTIVITIES AND SLOPED AREA SHALL BE TREATED WITH EROSION CONTROL BLANKET, WATTLE FLOW BREAKS, AND HYDROSEEDING.
3. THE EROSION CONTROL BLANKET SHALL BE SECURED WITH BLANKET STAPLES AT 3'-0" O.C.
4. HYDROSEED SHALL BE AN "OREGON CERTIFIED SEED" APPROVED FOR USE ON AIRPORT PROPERTIES, AND SHALL BE APPLIED AT A RATE OF 2 LB (PURE SEED WEIGHT) PER 1,000 SQUARE FEET.
5. SLOPE RE-GRADE SHALL INCLUDE CUTTING TOP OF SLOPE AND FILL AND COMPACTION OF "SINK-HOLE" AND ERODED AREAS, ALONG WITH PIPE PLACEMENT PREPARATION AND BEDDING.
6. FLAT TOP STORM DRAIN MANHOLE SHALL COMPLY WITH ODOT SPECIFICATION SECTION 00470, AND OREGON STANDARD DRAWINGS DETAIL NO. RD 338.

PRECISION APPROACH ENGINEERING
5125 Southwest Hout Street
Corvallis, OR 97333
541•754•0043

SHN CONSULTING ENGINEERS & GEOLOGISTS, INC.
275 MARKET AVENUE (541)266-9890
COOS BAY, OR 97420 FAX (541)266-9496

REVISIONS: DATE APPD.

DATE: JUNE 2013
DESIGN: RFS
DRAWN: FMK
CHECKED: FMK
REVISION NUMBER: 0
SCALE: AS SHOWN

NEWPORT MUNICIPAL AIRPORT
RUNWAY 16-34 REHABILITATION

PIPE OUTFALL F

PRECISION APPROACH ENGINEERING, INC.
AIP NO. 3-41-0040-021

PROJECT NUMBER: NPT008

SHEET NO. 70 OF 108

06/11/13 - 11:05am - fknox - \\Coosbaysvr1\projects\2013\613013-NwptArprtSWPP\Dwgs\613013-STORM WATER OUTFALLS.dwg

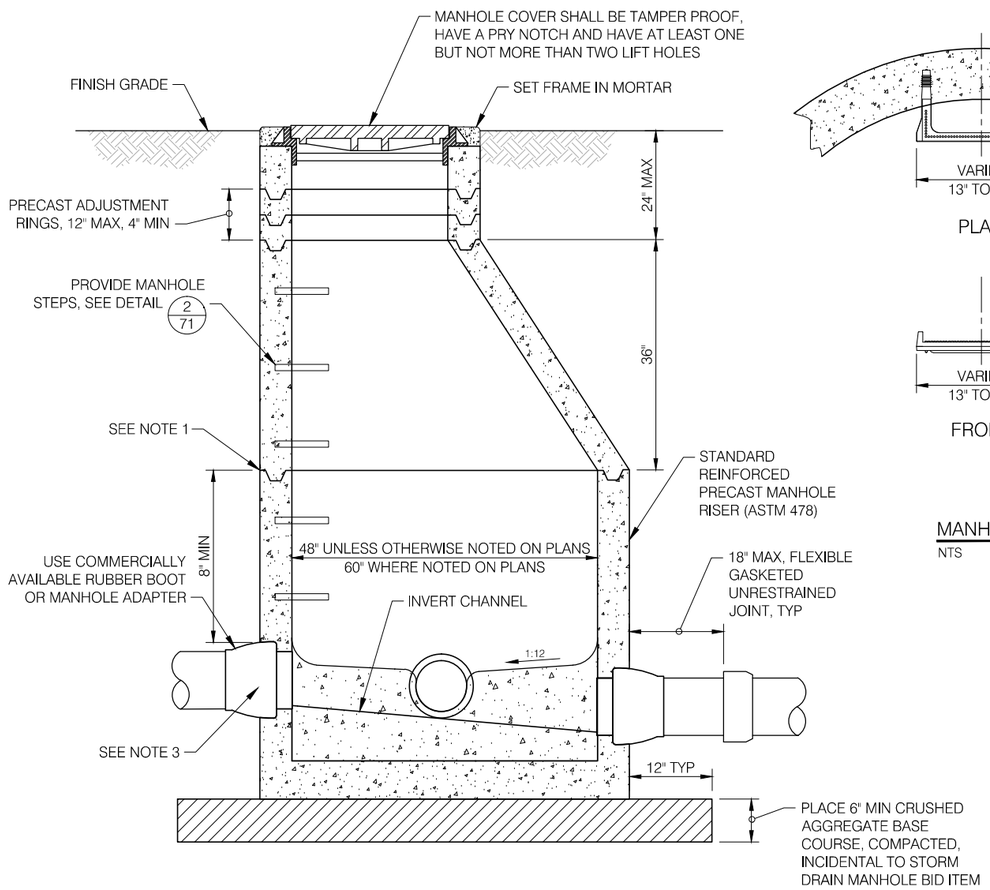

NOTES:

1. ALL JOINTS SHALL BE WATERTIGHT, SEALED WITH PREFORMED PLASTIC, RUBBER RING OR NON SHRINKING MORTAR. TO BE APPROVED BY ENGINEER.
2. INVERT CHANNEL SHALL BE COMMERCIAL GRADE CONCRETE.
3. IF MANHOLE IS BUILT OVER EXISTING STORM DRAIN PIPE, THE EXISTING PIPE SHALL BE LEFT IN PLACE. AFTER POURING THE CONCRETE BASE, REMOVE THE TOP SECTION OF THE EXISTING PIPE TO THE FULL WIDTH OF PIPE AND DIAMETER OF THE MANHOLE. COVER EXPOSED EDGES OF THE PIPE COMPLETELY WITH MORTAR AND TIE INTO CHANNEL OF NEW MANHOLE. TROWEL ALL MORTAR SURFACES SMOOTH.
4. ALL COMPONENTS TO BE CAPABLE OF SUPPORTING FAA "HEAVY LOAD" RATE SPECIFIED IN ADVISORY CIRCULAR 150/5320-6E

MANHOLE DETAIL 1/71
NTS

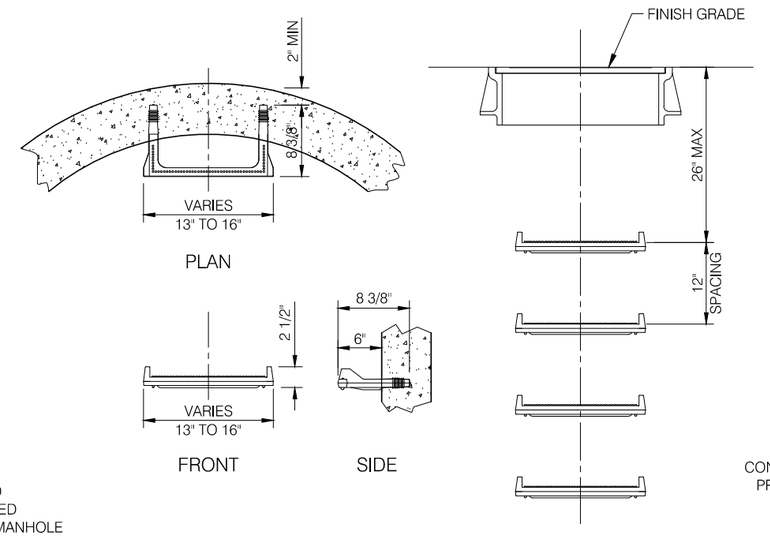

MANHOLE STEP DETAIL 2/71
NTS

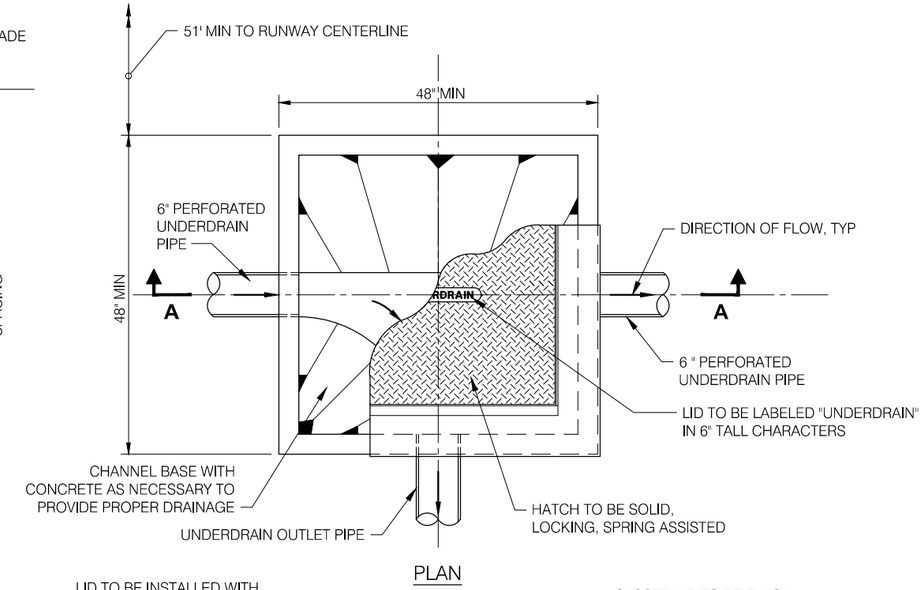

PLAN

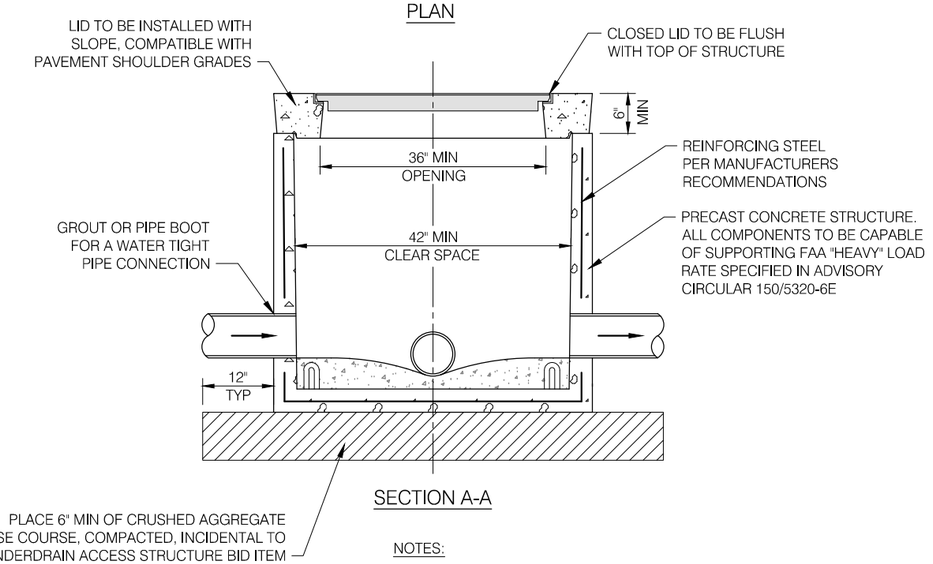

SECTION A-A

NOTES:

1. CONTRACTOR TO PROVIDE SHOP DRAWINGS FOR ENGINEERS APPROVAL PRIOR TO ORDERING STRUCTURES.
2. LID TO HINGE OPEN AWAY FROM RUNWAY.
3. BACKFILL SIMILAR TO PAVED AREA STORM DRAIN PIPE DETAIL 1/73

UNDERDRAIN ACCESS STRUCTURE DETAIL 3/71
NTS

PRECISION APPROACH ENGINEERING
5125 Southwest Hout Street
Corvallis, OR 97333
541•754•0043

REGISTERED PROFESSIONAL ENGINEER 72693PE OREGON JUNE 14, 2007 GEOFF W. VAUGHN EXPIRES 6/30/2014

REVISIONS: DATE APPD.

DATE:	JUNE 2013
DESIGN:	TLK
DRAWN:	JAW
CHECKED:	GWV
REVISION NUMBER:	0
SCALE: AS SHOWN	

NEWPORT MUNICIPAL AIRPORT
RUNWAY 16-34 REHABILITATION

DRAINAGE DETAILS

PRECISION APPROACH ENGINEERING, INC.
AIP NO. 3-41-0040-021

PROJECT NUMBER: **NPT008**

SHEET NO. **71** OF **108**

06/11/ 13 - 9:38pm - jwade - P:\N\NPT008-RW 16-34 Rehab-Dsn\0400CAD\DWG\Sheets\NPT008-SDDE.dwg

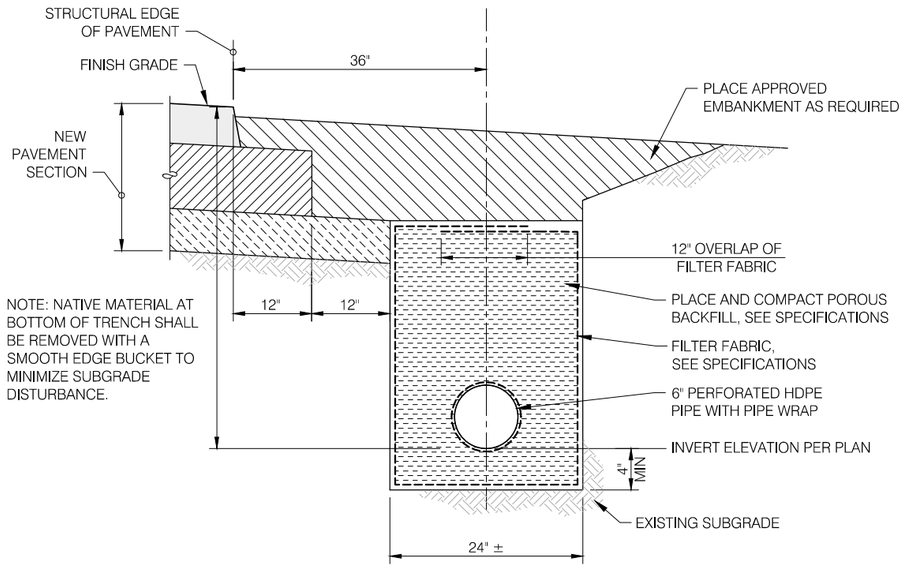

UNDERDRAIN DETAIL 1/72
NTS

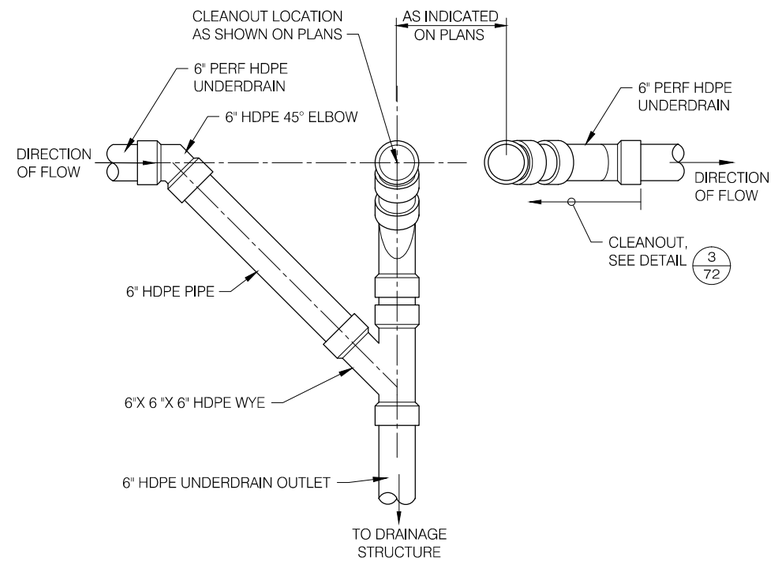

UNDERDRAIN OUTLET CONNECTION DETAIL 2/72
NTS

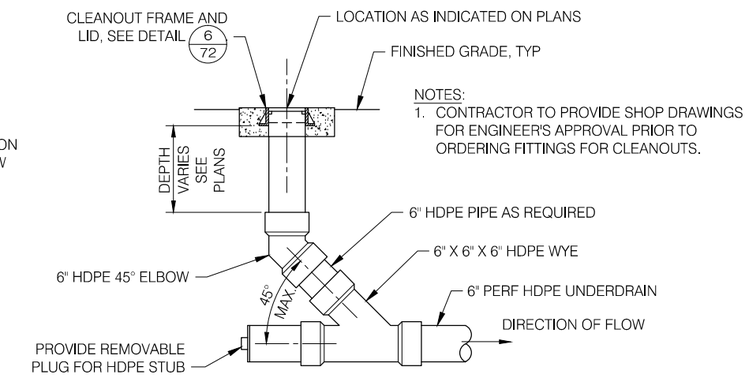

NOTES:
1. CONTRACTOR TO PROVIDE SHOP DRAWINGS FOR ENGINEER'S APPROVAL PRIOR TO ORDERING FITTINGS FOR CLEANOUTS.

CLEANOUT DETAIL 3/72
NTS

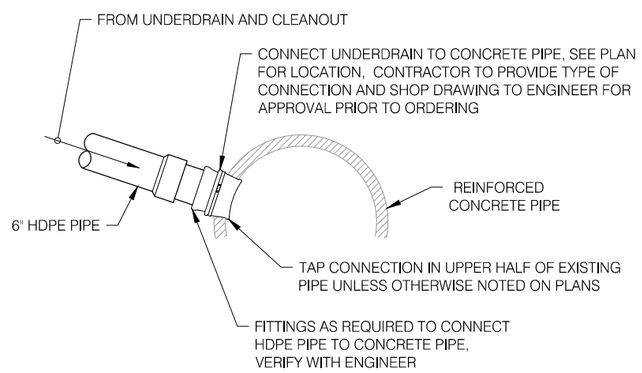

UNDERDRAIN CONNECTION TO PIPE DETAIL 4/72
NTS

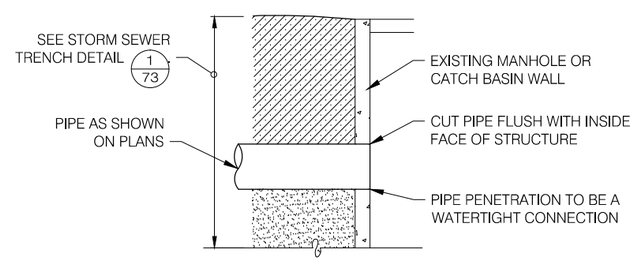

STORM DRAIN PIPE CONNECTION TO STRUCTURE DETAIL 5/72
NTS

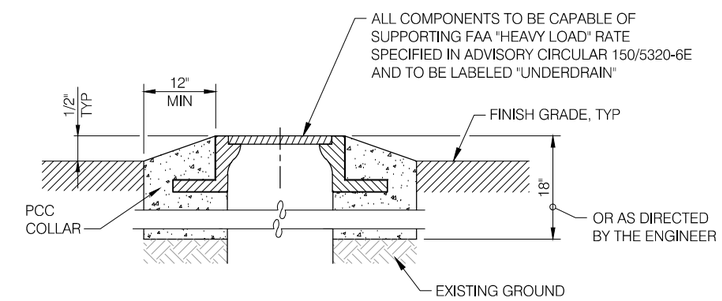

CLEANOUT FRAME AND LID DETAIL 6/72
NTS

PRECISION APPROACH ENGINEERING
5125 Southwest Hout Street
Corvallis, OR 97333
541•754•0043

REGISTERED PROFESSIONAL ENGINEER 72693PE OREGON JUNE 14, 2007 GEOFF W. VAUGHN EXPIRES 6/30/2014

REVISIONS: DATE APPD.

DATE:	JUNE 2013
DESIGN:	TLK
DRAWN:	JAW
CHECKED:	GWV
REVISION NUMBER:	0
SCALE: AS SHOWN	

NEWPORT MUNICIPAL AIRPORT
RUNWAY 16-34 REHABILITATION

DRAINAGE DETAILS

PRECISION APPROACH ENGINEERING, INC.
AIP NO. 3-41-0040-021

PROJECT NUMBER: **NPT008**

SHEET NO. **72** OF **108**

06/11/ 13 - 9:38pm - jwade - P:\N\NPT008-RW 16-34 Rehab-Dsn\0400CAD\DWG\Sheets\NPT008-SDDE.dwg

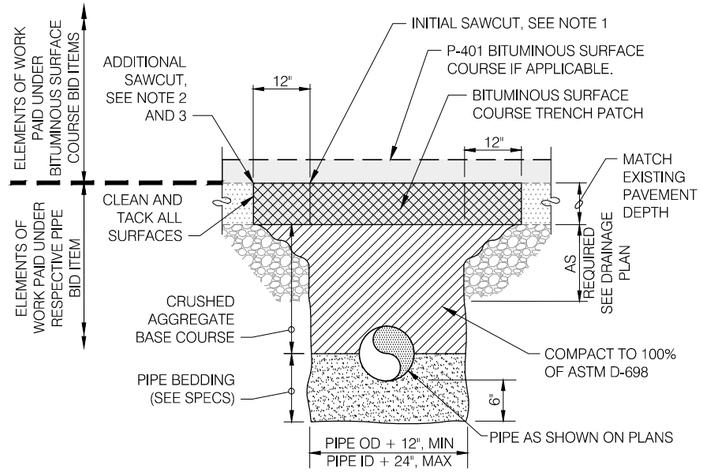

EXISTING PAVEMENT

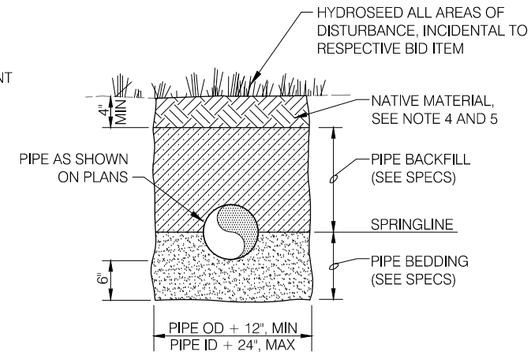

NON-PAVED

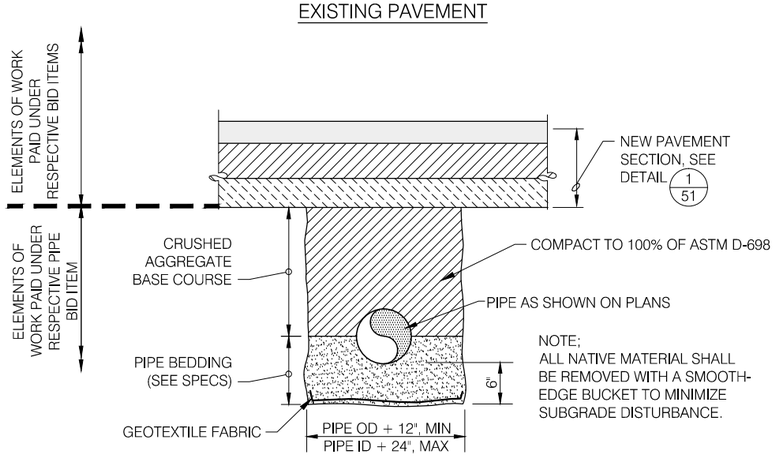

NOTE;
ALL NATIVE MATERIAL SHALL BE REMOVED WITH A SMOOTH-EDGE BUCKET TO MINIMIZE SUBGRADE DISTURBANCE.

NEW PAVEMENT

NOTES:

1. INITIAL SAWCUT TO PROVIDE AREA OF PAVEMENT REMOVAL FOR TRENCHING AND BACKFILL.
2. ADDITIONAL SAWCUT INTENDED TO COMPENSATE FOR PAVEMENT UNDERMINING, VERIFY WITH ENGINEER PRIOR TO SAW CUTTING.
3. BACKFILL TO WITHIN 10" OF EXISTING SURFACE PRIOR TO MAKING ADDITIONAL SAWCUT.
4. ALL NATIVE MATERIAL SHALL BE REMOVED WITH A SMOOTH EDGE BUCKET TO MINIMIZE SUBGRADE DISTURBANCE.
5. STRIP AND STOCKPILE NATIVE TOP SOIL PRIOR TO TRENCHING, PLACE AND COMPACT TO A DENSE AND UNYIELDING CONDITION AS APPROVED BY THE ENGINEER PRIOR TO HYDROSEEDING.

STORM DRAIN PIPE DETAIL — 1/73
NTS

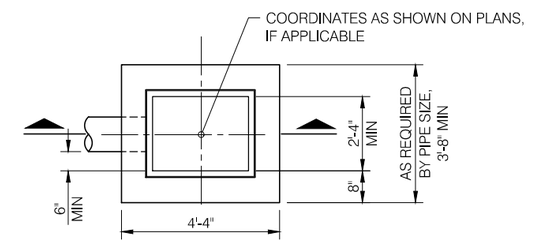

PLAN

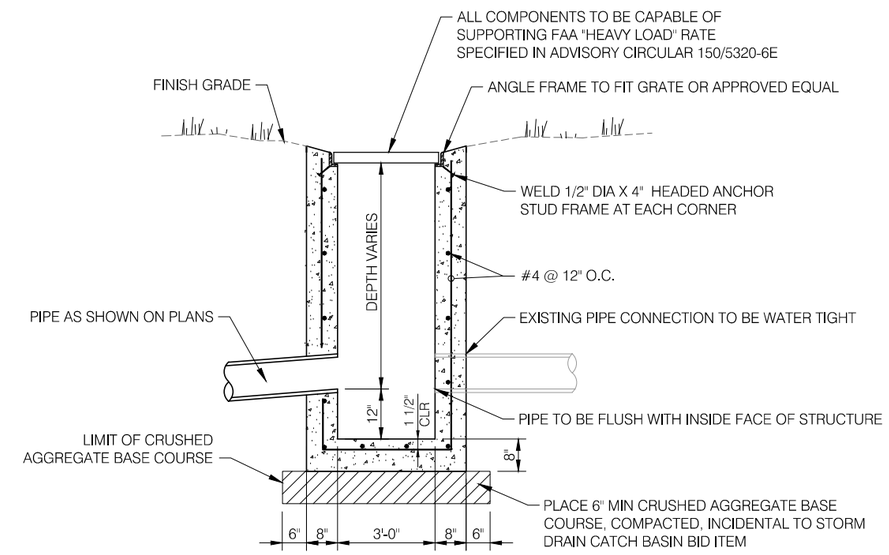

SECTION

NOTES:

1. DIMENSIONS OF CATCH BASIN MAY CHANGE, WITH ENGINEER'S APPROVAL, IF REQUIRED FOR COMPATIBILITY WITH FRAME AND GRATE OR DUE TO PIPE SIZE.
2. GRATE SHALL BE BOLTED TO FRAME PER MANUFACTURER'S RECOMMENDATION.

CATCH BASIN DETAIL — 2/73
NTS

PRECISION APPROACH ENGINEERING
5125 Southwest Hout Street
Corvallis, OR 97333
541•754•0043

REGISTERED PROFESSIONAL ENGINEER — OREGON — JUNE 14, 2007 — GEOFF W. VAUGHN — EXPIRES 6/30/2014

REVISIONS: DATE APPD.

DATE:	JUNE 2013
DESIGN:	TLK
DRAWN:	JAW
CHECKED:	GWV
REVISION NUMBER:	0
SCALE: AS SHOWN	

NEWPORT MUNICIPAL AIRPORT
RUNWAY 16-34 REHABILITATION

DRAINAGE DETAILS

PRECISION APPROACH ENGINEERING, INC.
AIP NO. 3-41-0040-021

PROJECT NUMBER: **NPT008**

SHEET NO. **73** OF **108**

06/11/13 - 9:38pm - jwade - P:\N\NPT008-RW 16-34 Rehab-Dsn\04000CAD\DWG\Sheets\NPT008-SDDE.dwg

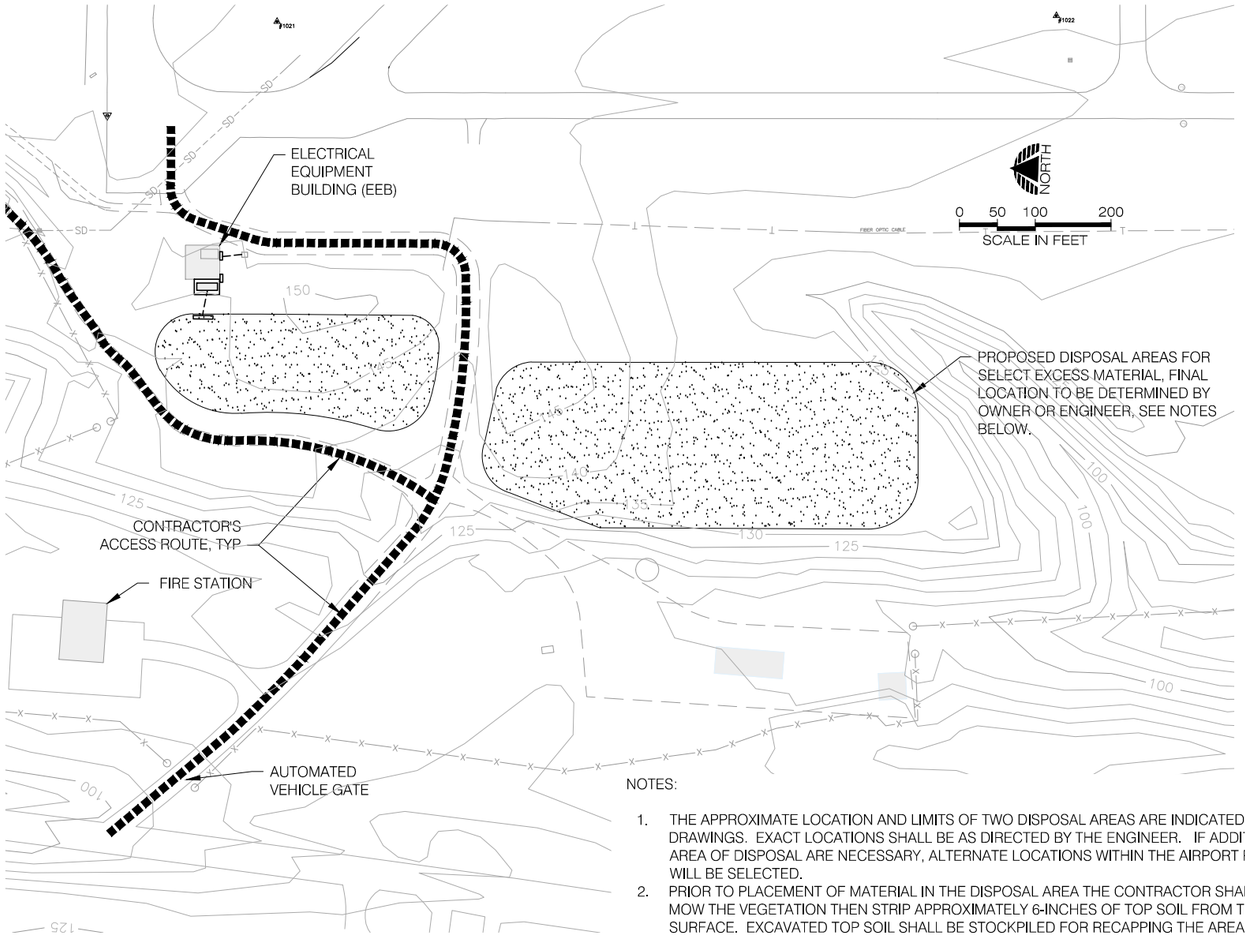

NOTES:

1. THE APPROXIMATE LOCATION AND LIMITS OF TWO DISPOSAL AREAS ARE INDICATED ON THE DRAWINGS. EXACT LOCATIONS SHALL BE AS DIRECTED BY THE ENGINEER. IF ADDITIONAL AREA OF DISPOSAL ARE NECESSARY, ALTERNATE LOCATIONS WITHIN THE AIRPORT PROPERTY WILL BE SELECTED.
2. PRIOR TO PLACEMENT OF MATERIAL IN THE DISPOSAL AREA THE CONTRACTOR SHALL TIGHT MOW THE VEGETATION THEN STRIP APPROXIMATELY 6-INCHES OF TOP SOIL FROM THE SURFACE. EXCAVATED TOP SOIL SHALL BE STOCKPILED FOR RECAPPING THE AREA AT COMPLETION OF THE DISPOSAL MATERIAL PLACEMENT. EXCAVATION OF TOP SOIL SHALL BE PAID FOR AS UNCLASSIFIED EXCAVATION.
3. ONLY SELECT EXCESS MATERIAL SHALL BE PLACED IN DISPOSAL AREAS. PLACEMENT OF THE MATERIAL SHALL BE PER THE SAME REQUIREMENTS FOR EMBANKMENTS AS DESCRIBED IN THE CONTRACT DOCUMENT FOR P-152 EXCAVATION AND EMBANKMENT. DEPTH OF THE EMBANKMENT WILL VARY BUT COULD FEASIBLY REACH 10 TO 15 FEET IN SOME AREAS.
4. THE LIMITS AND SHAPE OF THE DISPOSAL AREA(S) SHALL BE AS DIRECTED BY THE ENGINEER. SURFACES OF THE DISPOSAL AREA SHALL BE GRADED TO ALLOW WATER RUN-OFF AT ALL TIMES. SIDE SLOPES OF THE DISPOSAL AREA SHALL NOT EXCEED 4:1.
5. REFER TO THE CSCP-BMPS AND SPECIFICATIONS FOR ADDITIONAL REQUIREMENTS.

DISPOSAL AREA GRADING DETAIL (1/74)
NTS

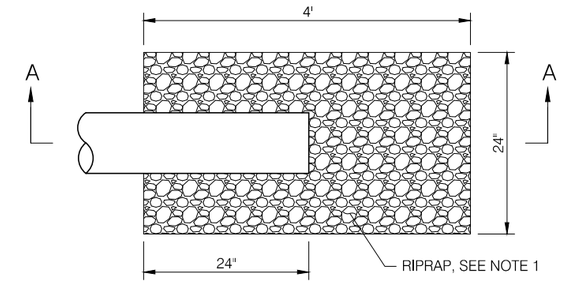

PLAN

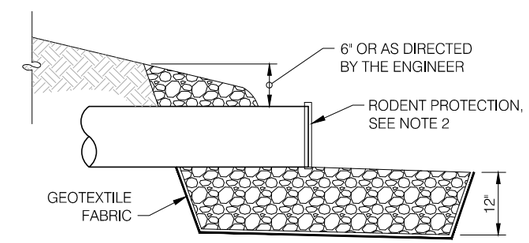

SECTION A-A

NOTES:

1. 6" UNDERDRAIN OUTFALL SHALL USE 2-4" QUARRY SPALLS FOR SLOPE PROTECTION, PLACE AS DIRECTED BY ENGINEER.
2. CONTRACTOR SHALL PROVIDE REMOVABLE CORROSION RESISTANT RODENT SHIELD AT END OF PIPE. SUBMIT SHOP DRAWING FOR APPROVAL BY ENGINEER PRIOR TO CONSTRUCTION.
3. ELEMENTS OF WORK FOR OUTFALL PROTECTION TO BE CONSIDERED INCIDENTAL TO 6-INCH SOLID PIPE HDPE BID ITEM.

STORM DRAIN OUTFALL DETAIL (2/74)
NTS

PRECISION APPROACH ENGINEERING
5125 Southwest Hout Street
Corvallis, OR 97333
541•754•0043

REGISTERED PROFESSIONAL ENGINEER 72693PE OREGON JUNE 14, 2007 GEOFF W. VAUGHN
EXPIRES 6/30/2014

REVISIONS: DATE APPD.

DATE:	JUNE 2013
DESIGN:	TLK
DRAWN:	JAW
CHECKED:	GWV
REVISION NUMBER:	0
SCALE: AS SHOWN	

NEWPORT MUNICIPAL AIRPORT
RUNWAY 16-34 REHABILITATION

DRAINAGE DETAILS

PRECISION APPROACH ENGINEERING, INC.
AIP NO. 3-41-0040-021

PROJECT NUMBER: **NPT008**

SHEET NO. **74** OF **108**

06/11/ 13 - 9:38pm - jwade - P:\N\NPT008-RW 16-34 Rehab-Dsn\0400CAD\DWG\Sheets\NPT008-SDDE.dwg

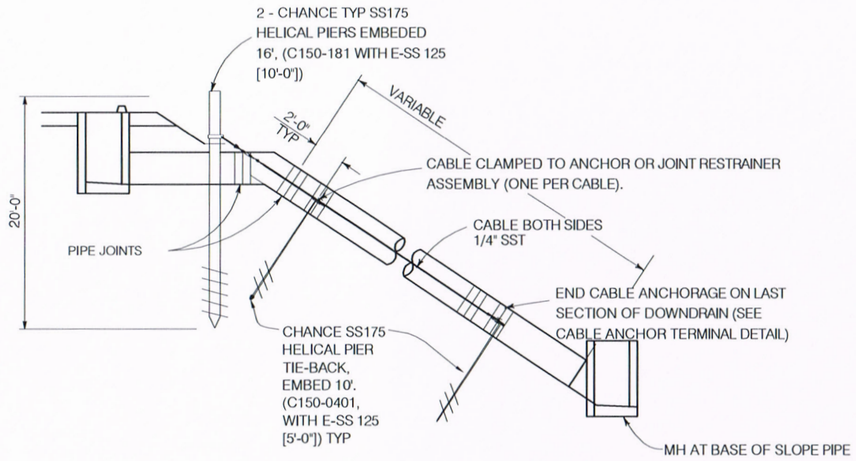

CABLE ANCHORAGE SYSTEM

NTS

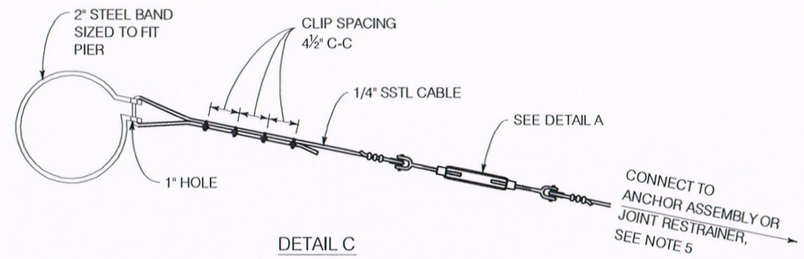

DETAIL C

BAND AND CABLE ASSEMBLY DETAIL
FOR CABLE ANCHORAGE SYSTEM

NTS

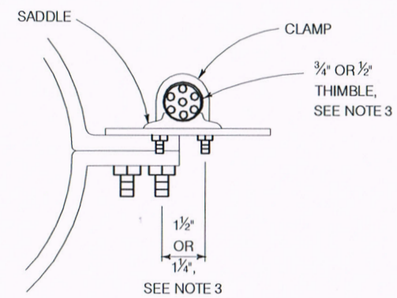

END VIEW

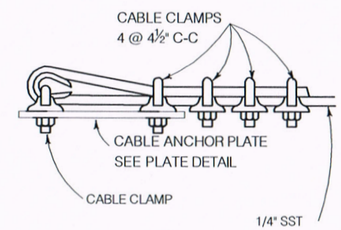

CABLE ANCHOR TERMINAL DETAIL

NTS

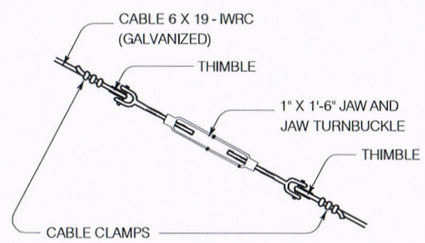

DETAIL A

NTS

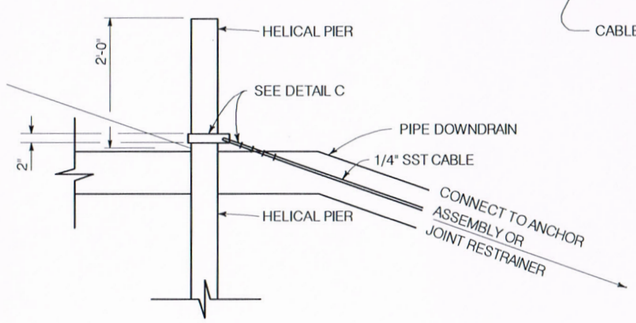

DETAIL B

STEEL PIPE PILE DETAILS
FOR CABLE ANCHORAGE SYSTEM

NTS

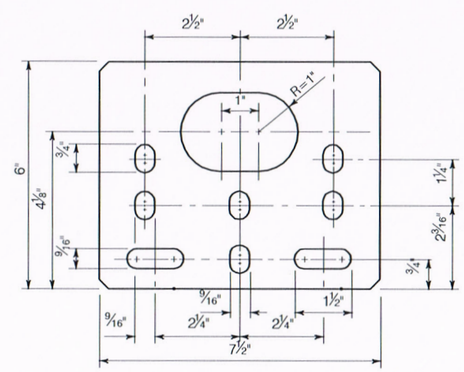

PLATE DETAIL

NTS

NOTES:

1. ALL HARDWARE TO BE GALVANIZED AFTER FABRICATION.
2. CABLE SHALL NOT CONTACT SOIL IN FINISHED POSITION. EITHER ADJUST POSITION, OR REPLACE AFFECTED PORTION OF CABLE WITH GALVANIZED STEEL ROD OF EQUIVALENT DIAMETER.

PRECISION APPROACH ENGINEERING
5125 Southwest Hout Street
Corvallis, OR 97333
541•754•0043

SAHN
CONSULTING ENGINEERS & GEOLOGISTS, INC.
275 MARKET AVENUE (541)266-9890
COOS BAY, OR 97420 FAX (541)266-9496

REVISIONS: DATE APPD.

DATE:	JUNE 2013
DESIGN:	RFS
DRAWN:	FMK
CHECKED:	FMK
REVISION NUMBER:	0
SCALE: AS SHOWN	

NEWPORT MUNICIPAL AIRPORT
RUNWAY 16-34 REHABILITATION

PIPE ANCHOR DETAILS

PRECISION APPROACH ENGINEERING, INC.
AIP NO. 3-41-0040-021

PROJECT NUMBER: **NPT008**

SHEET NO. **75** OF **108**

06/11/13 - 9:24am - fknox - \\Coosbaysvr1\projects\2013\613013-Nwpt\prntSWPP\Dwgs\613013-STORM WATER OUTFALLS.dwg

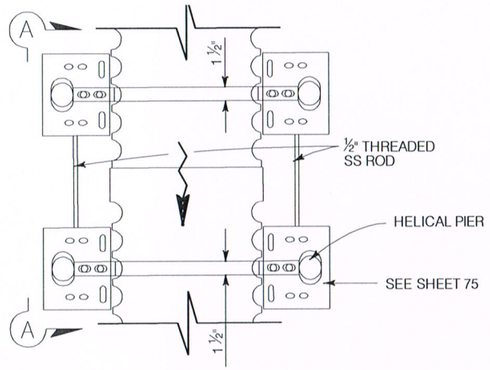

PLAN

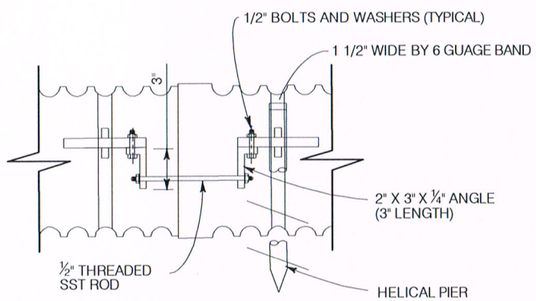

SECTION A-A
PLASTIC PIPE
JOINT RESTRAINER ASSEMBLY
NTS

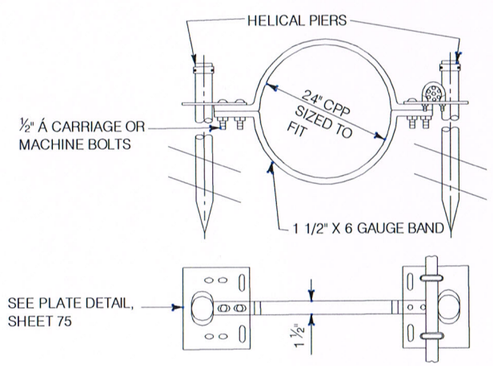

PLASTIC PIPE
JOINT RESTRAINER ASSEMBLY
NTS

NOTES:

1. ALL HARDWARE TO BE GALVANIZED AFTER FABRICATION. ALL HELICAL PIERS TO BE EITHER GALVANIZED AFTER FABRICATION, OR BE FABRICATED FROM PRE-GALVANIZED PIPE. IF PRE-GALVANIZED PIPE IS USED, WELD AREAS SHALL BE CLEANED, AND PAINTED WITH ZINC-RICH PRIMER.
2. HELICAL PIERS TO BE USED WITH JOINT RESTRAINER WHEN SPECIFIED.
3. PLASTIC PIPE AND FITTINGS USED FOR DRAINS SHALL BE FROM ONE MANUFACTURER FOR EACH INSTALLATION.
4. FOR CABLE ANCHORAGE SYSTEM DETAILS, SEE SHEET 75.

PRECISION APPROACH ENGINEERING
5125 Southwest Hout Street
Corvallis, OR 97333
541•754•0043

SHN
CONSULTING ENGINEERS & GEOLOGISTS, INC.
275 MARKET AVENUE (541)266-9890
COOS BAY, OR 97420 FAX (541)266-9496

REVISIONS: DATE APPD.

DATE:	JUNE 2013
DESIGN:	RFS
DRAWN:	FMK
CHECKED:	FMK
REVISION NUMBER:	0
SCALE: AS SHOWN	

NEWPORT MUNICIPAL AIRPORT
RUNWAY 16-34 REHABILITATION

PIPE ANCHOR DETAILS

PRECISION APPROACH ENGINEERING, INC.
AIP NO. 3-41-0040-021

PROJECT NUMBER: **NPT008**

SHEET NO. **76** OF **108**

06/11/13 - 11:41am - wwhite - \\Coosbaysvr1\projects\2013\613013-Nwpt\Arpt\SWPP\Dwgs\613013-STORM WATER OUTFALLS.dwg